CFP + ISD 1093 / ISD 2093 / ISD
CFP + ZCE + ISD 1093 / ISD 2093 / ISD

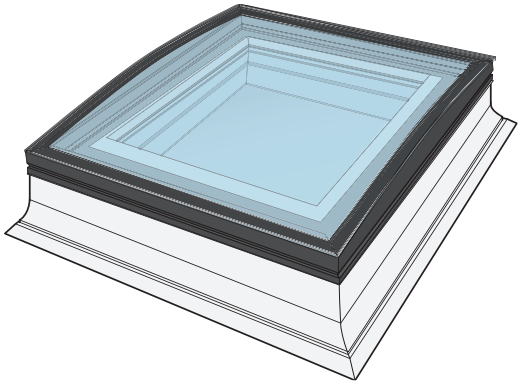

0°–15°

ISD 1093

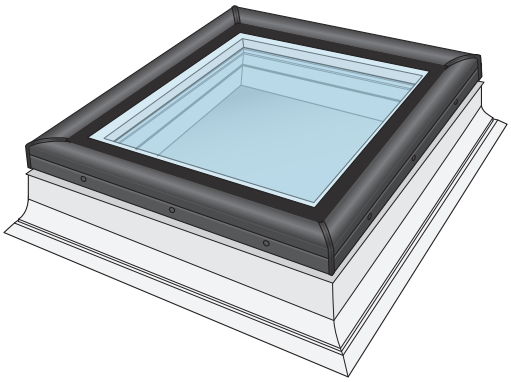

2°–15°

ISD 2093

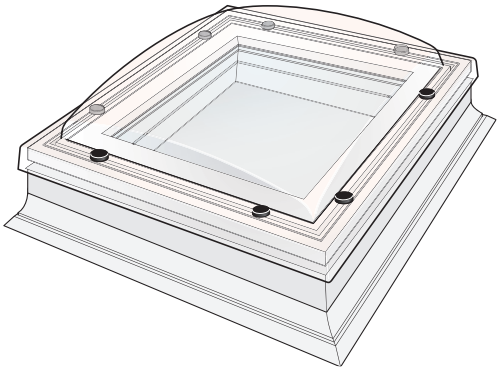

0°–15°

ISD

VELUX®

VAS 451997-2025-03

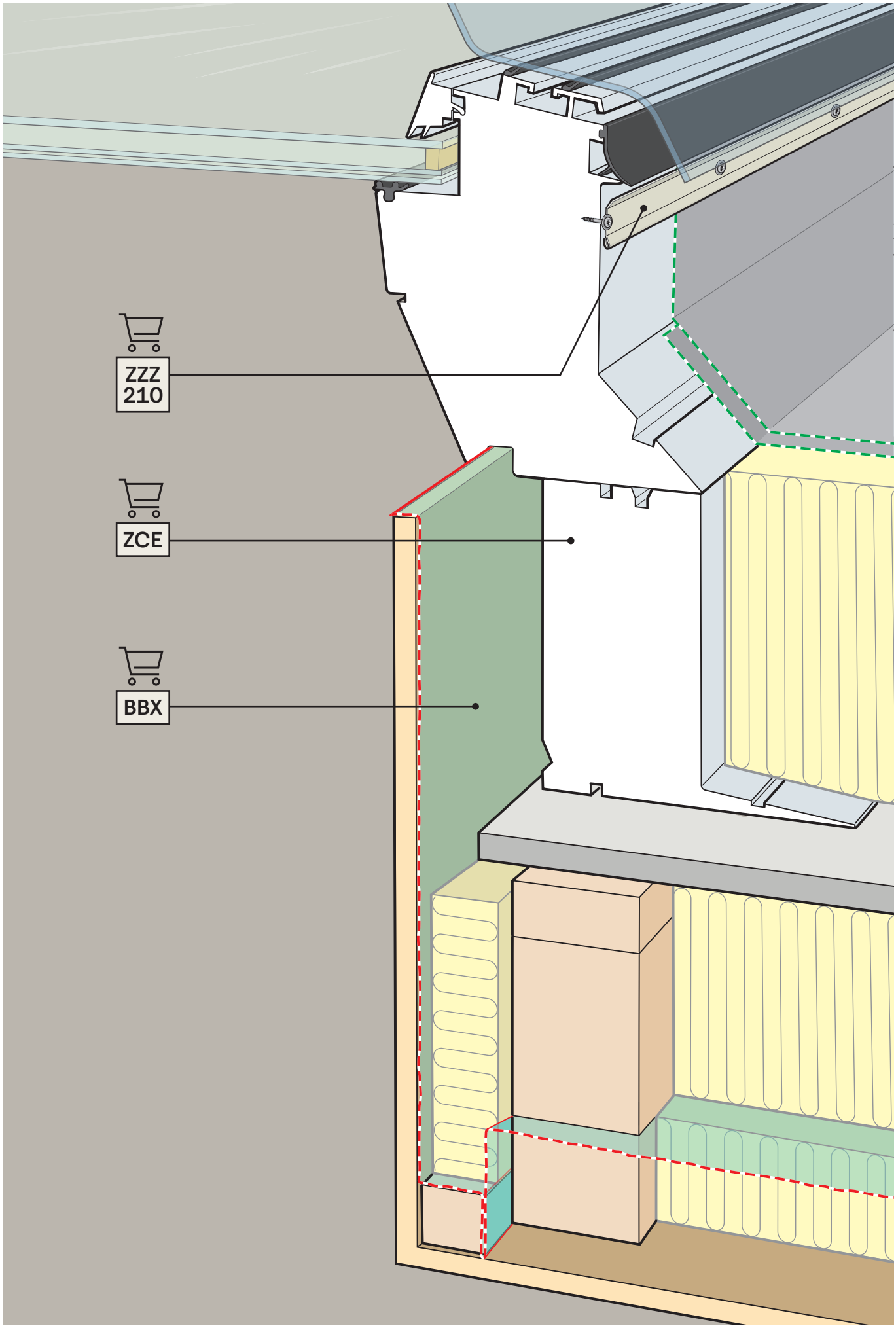
ZZZ
210
ZCE
BBX

CFP

Pages
4-9

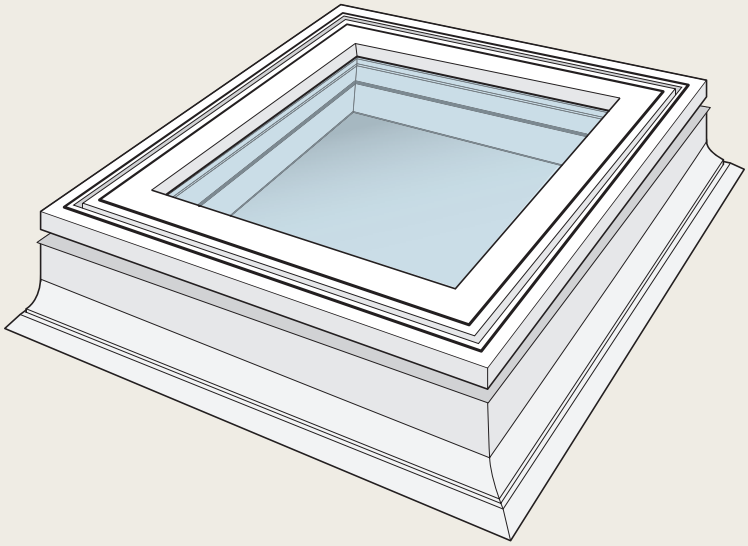

CFP + ZCE

Pages
10-19

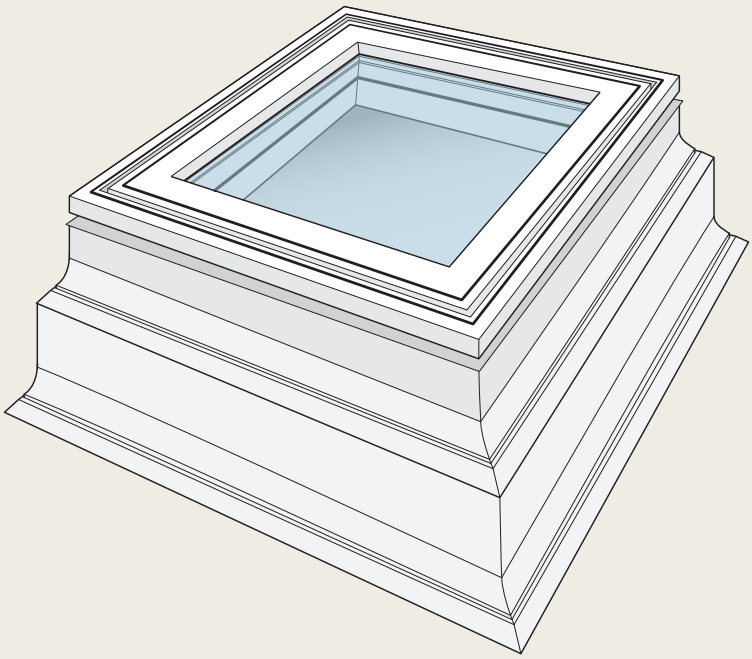

1

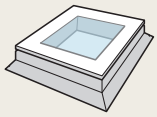

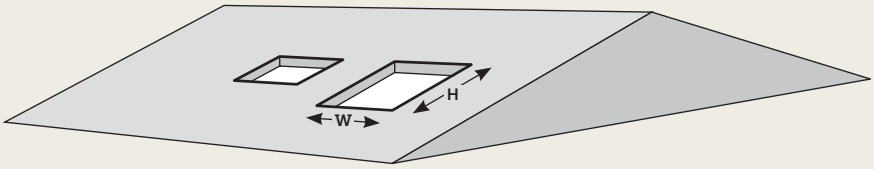

CFP	W mm	H mm
060060	600-610	600-610
080080	800-810	800-810
060090	600-610	900-910
090090	900-910	900-910
090120	900-910	1200-1210
100100	1000-1010	1000-1010
100150	1000-1010	1500-1510
120120	1200-1210	1200-1210
150150	1500-1510	1500-1510

BBX

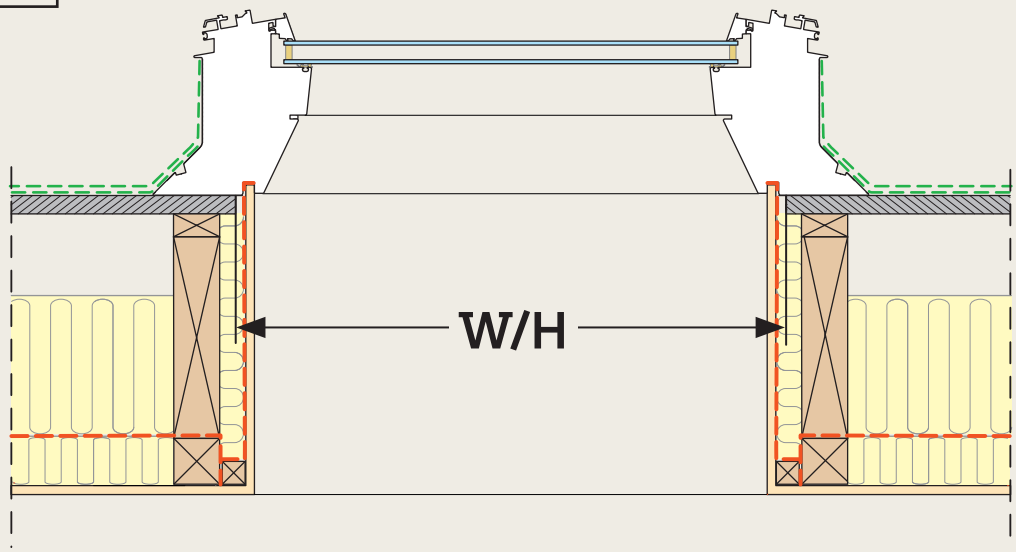

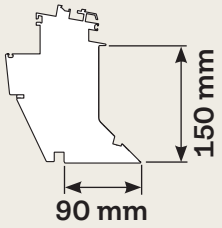

BBX

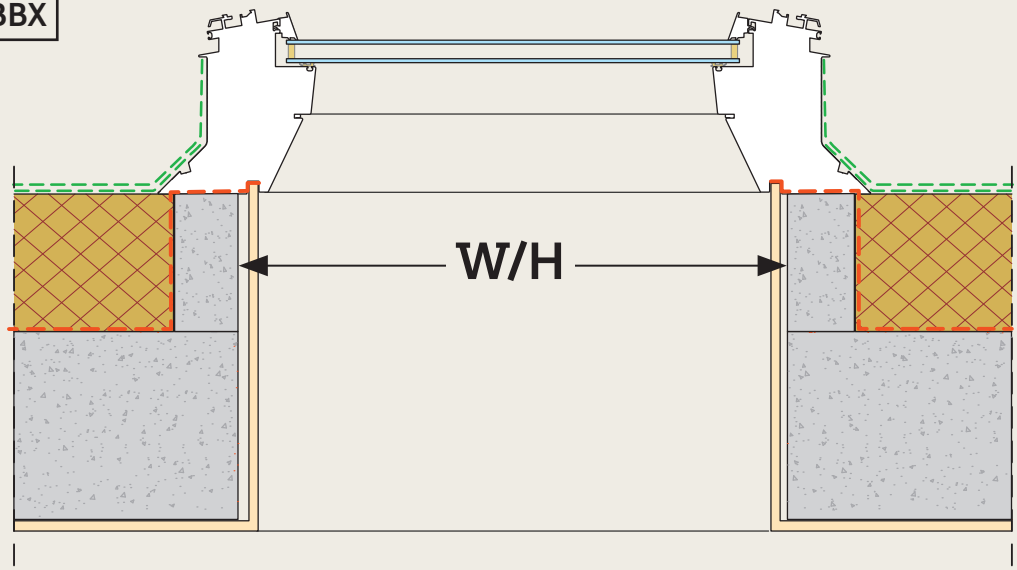

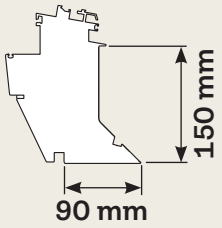

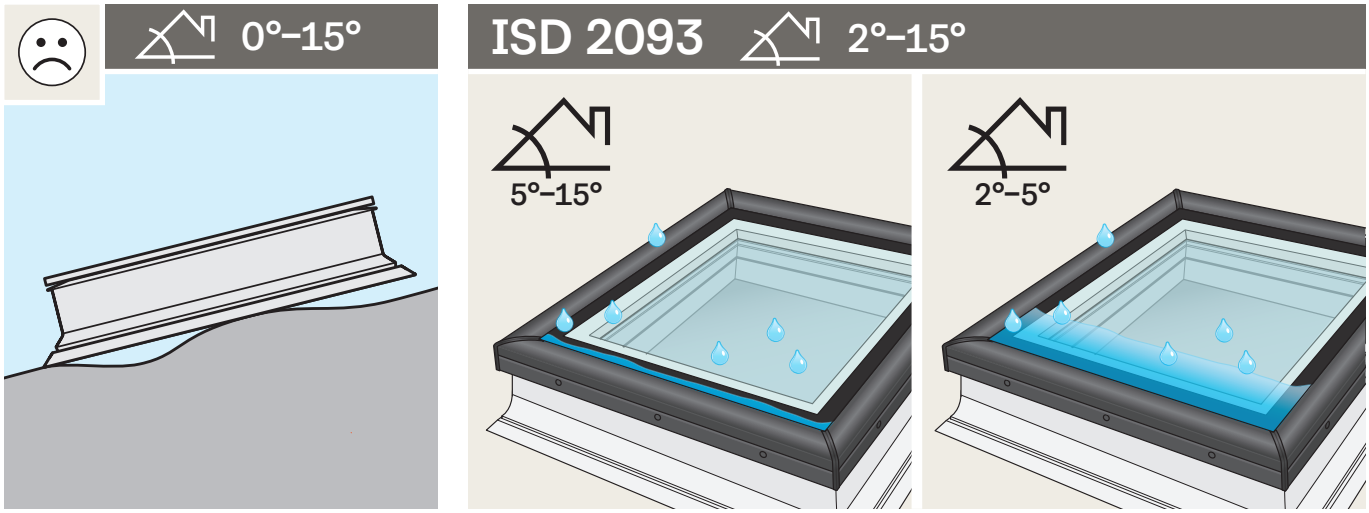
0°–15°
ISD 2093
2°–15°
5°–15°
2°–5°

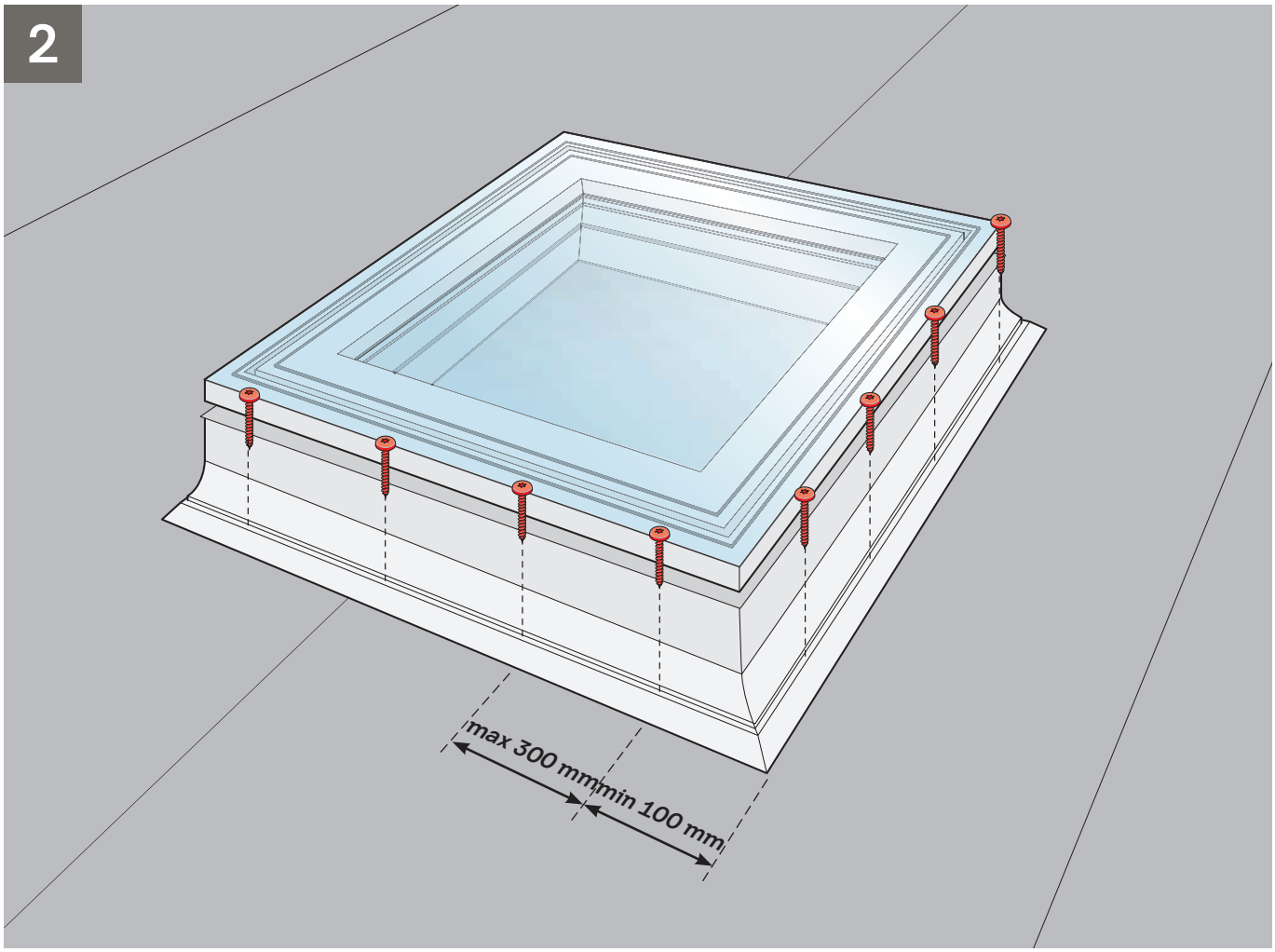
2
max 300 mm
min 100 mm

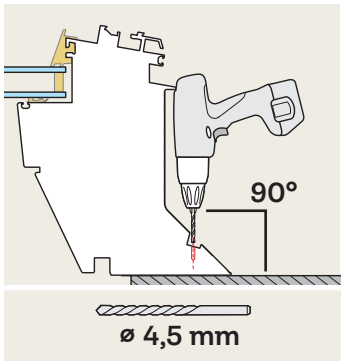
90°
ø 4,5 mm

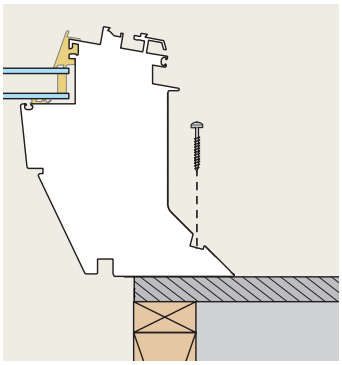

3

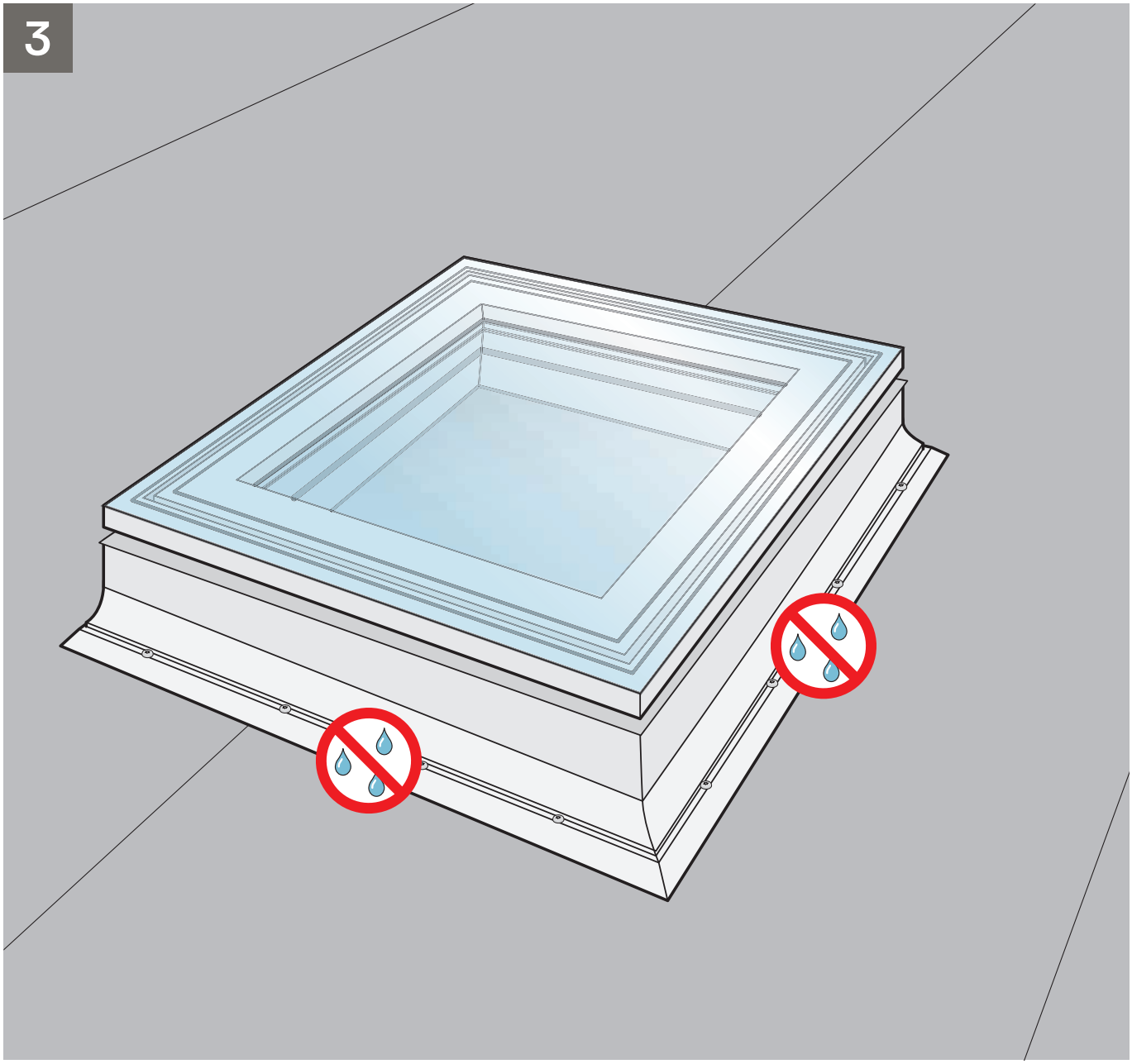



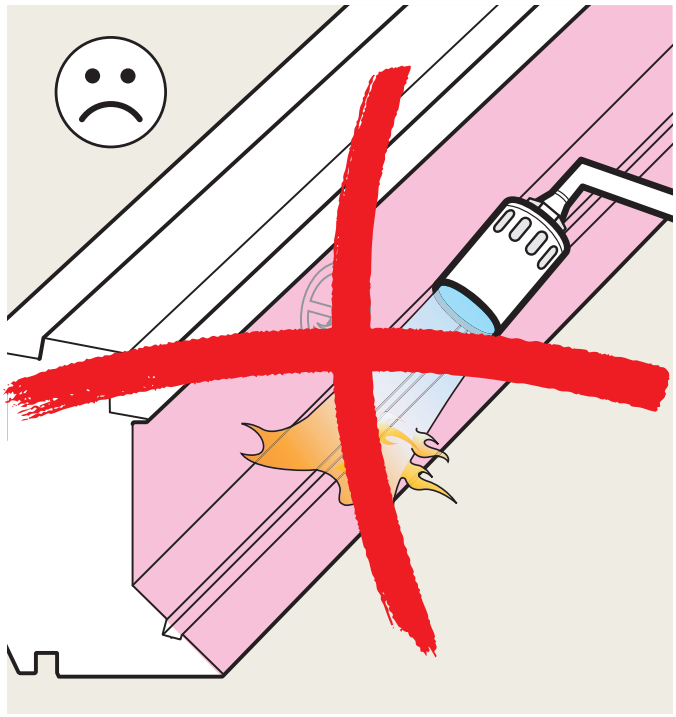

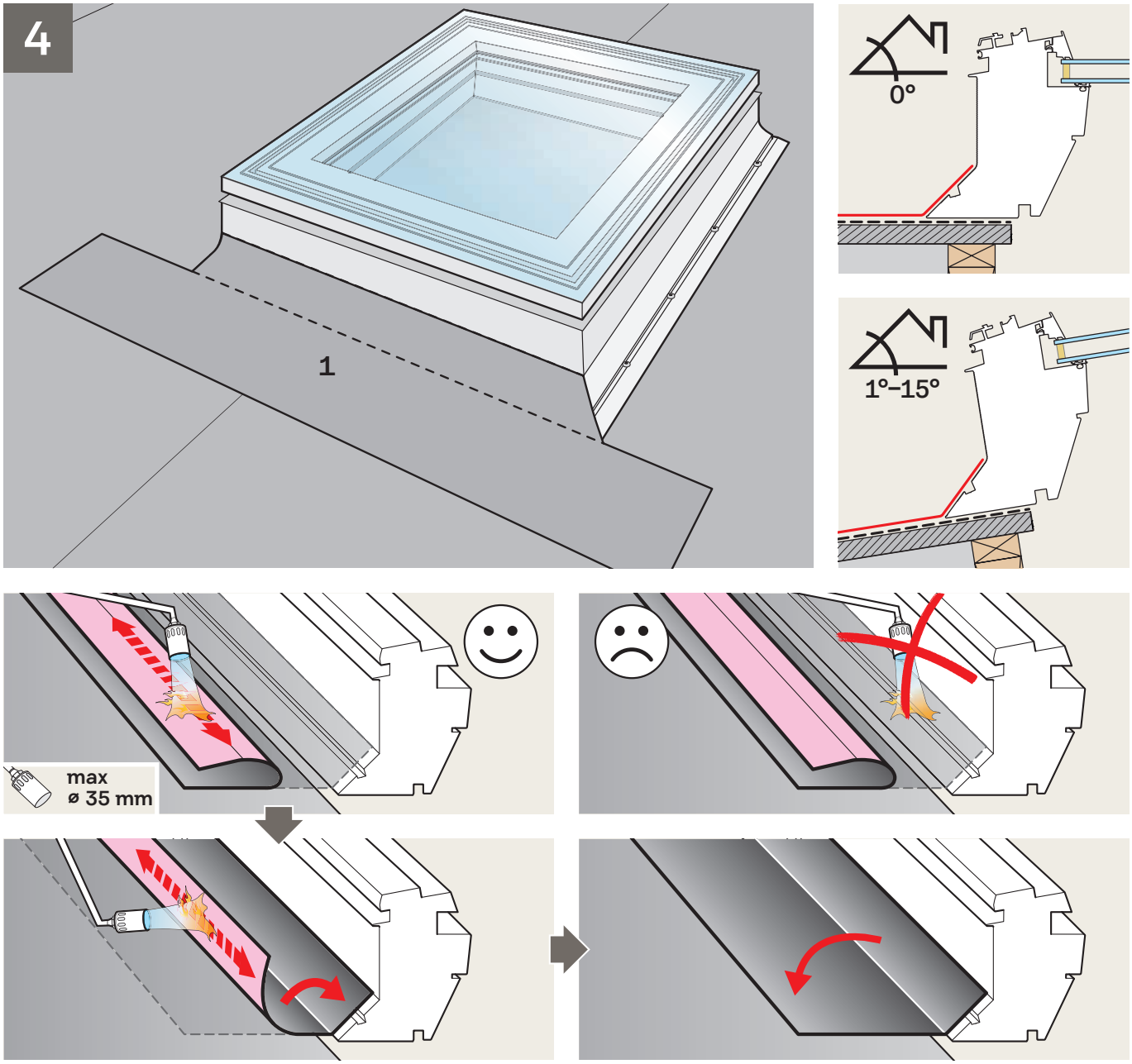
4
1
0°
1°–15°
max
ø 35 mm
5
1
2
2
3

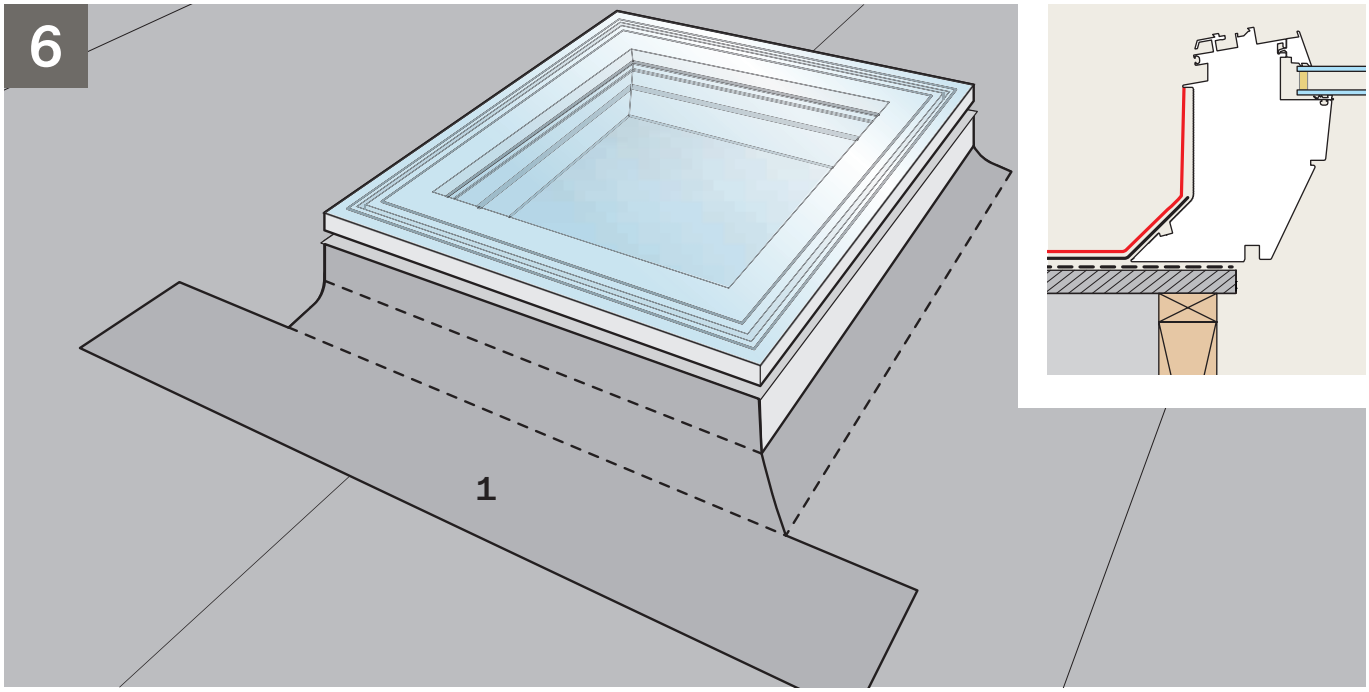
6
1

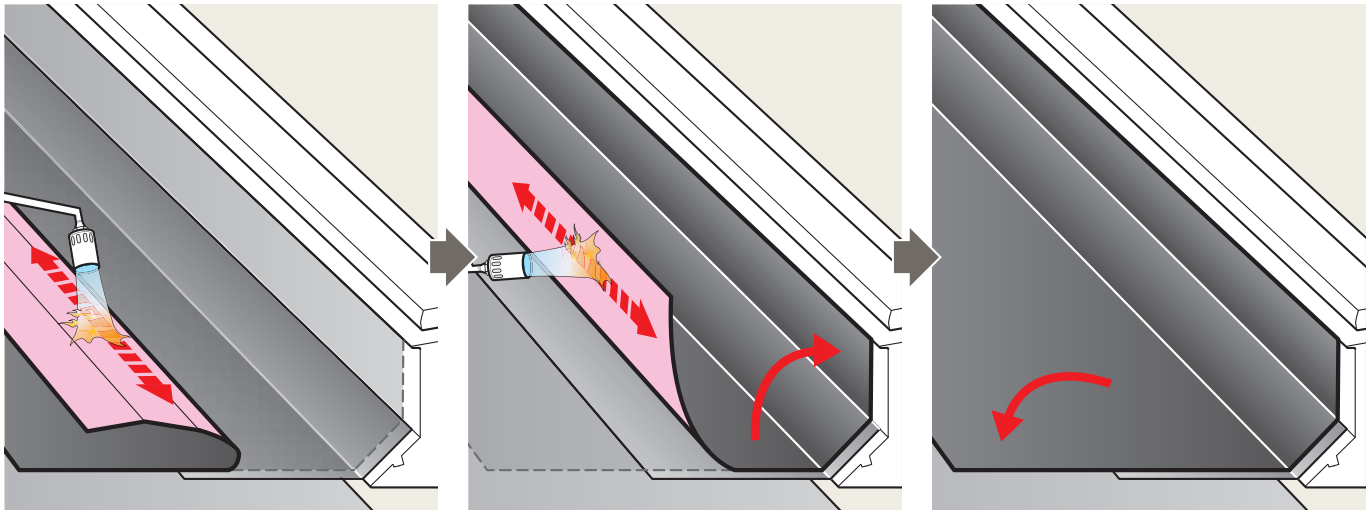

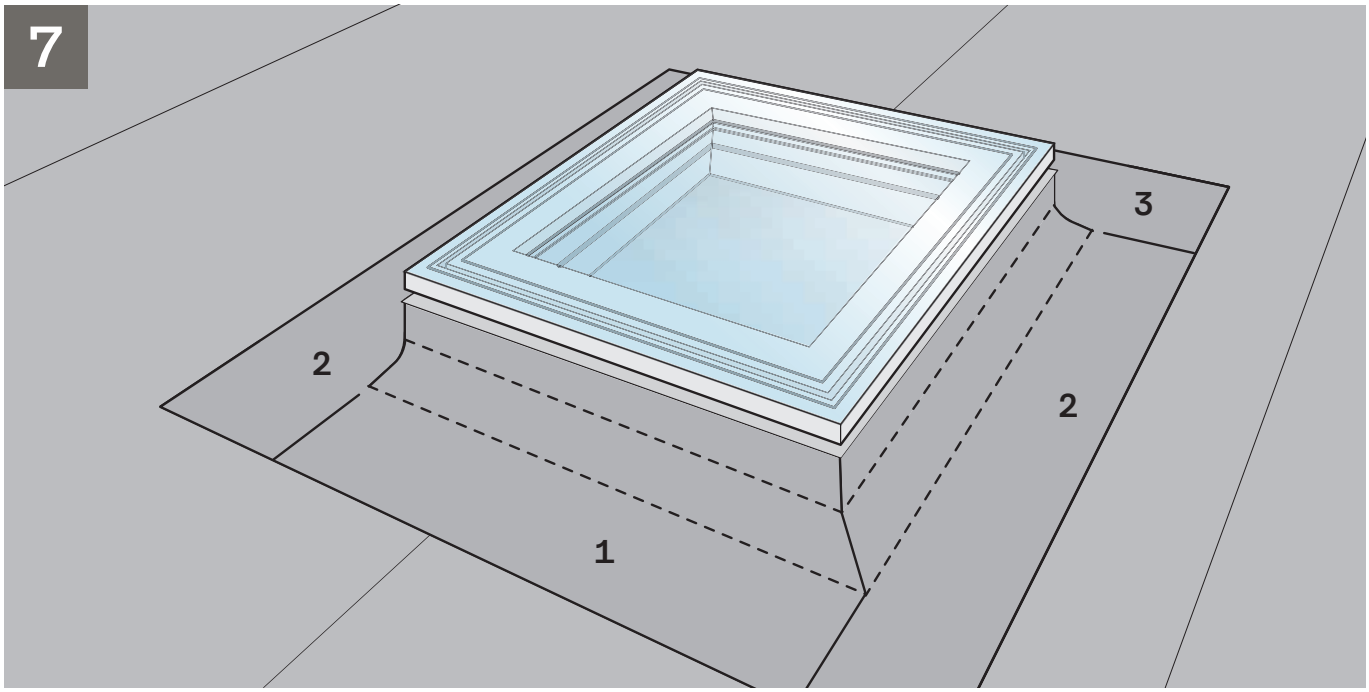
7
1
2
2
3

8

ZZZ
210

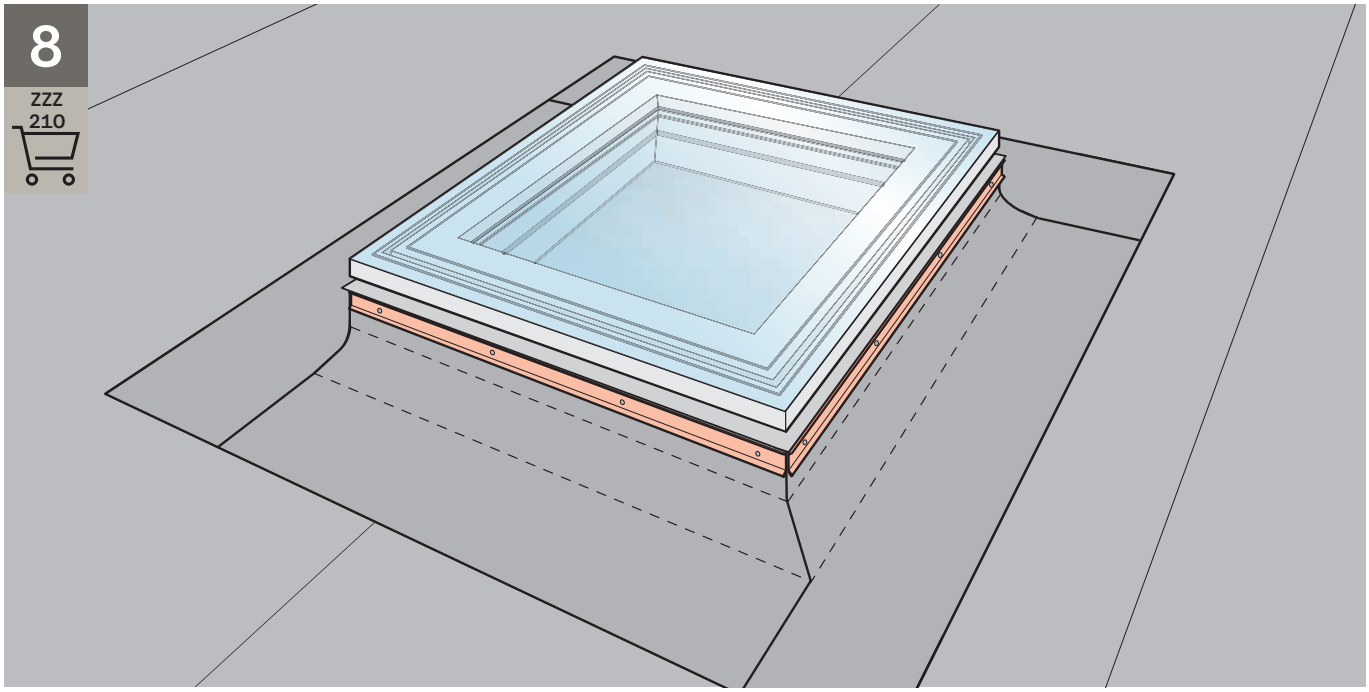

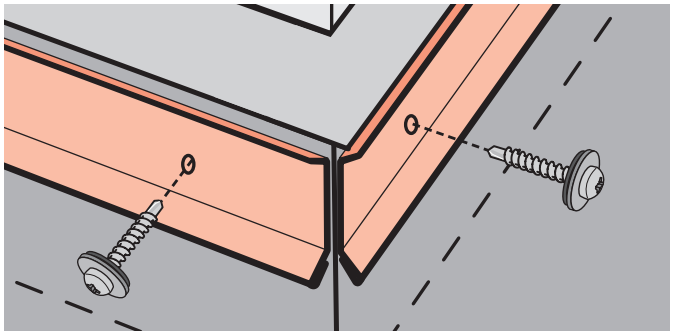

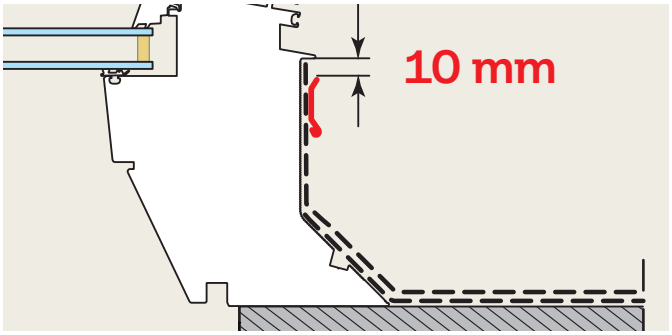

ISD 1093

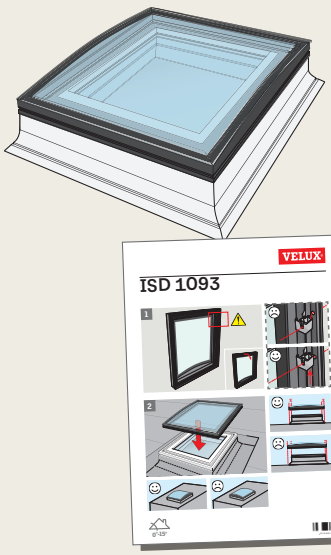

ISD 2093

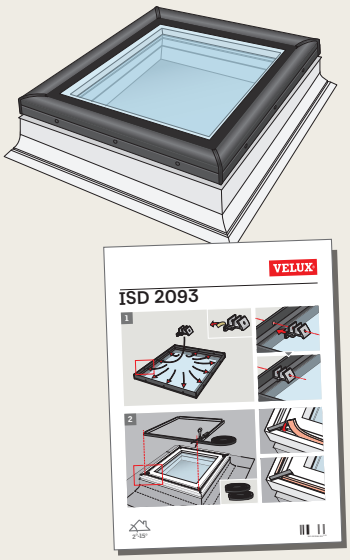

ISD

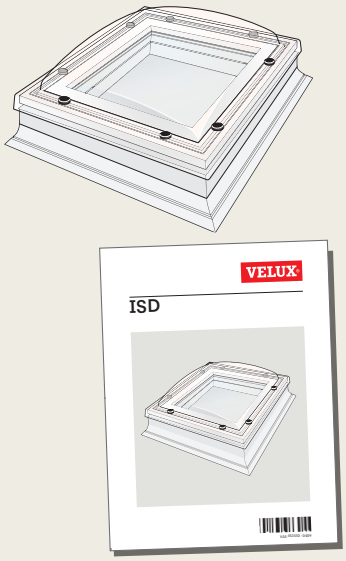

1a

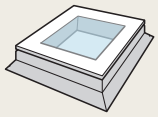

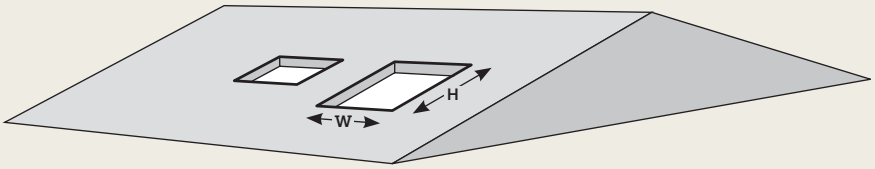

CFP	W mm	H mm
060060	600-610	600-610
080080	800-810	800-810
060090	600-610	900-910
090090	900-910	900-910
090120	900-910	1200-1210
100100	1000-1010	1000-1010
100150	1000-1010	1500-1510
120120	1200-1210	1200-1210
150150	1500-1510	1500-1510

BBX

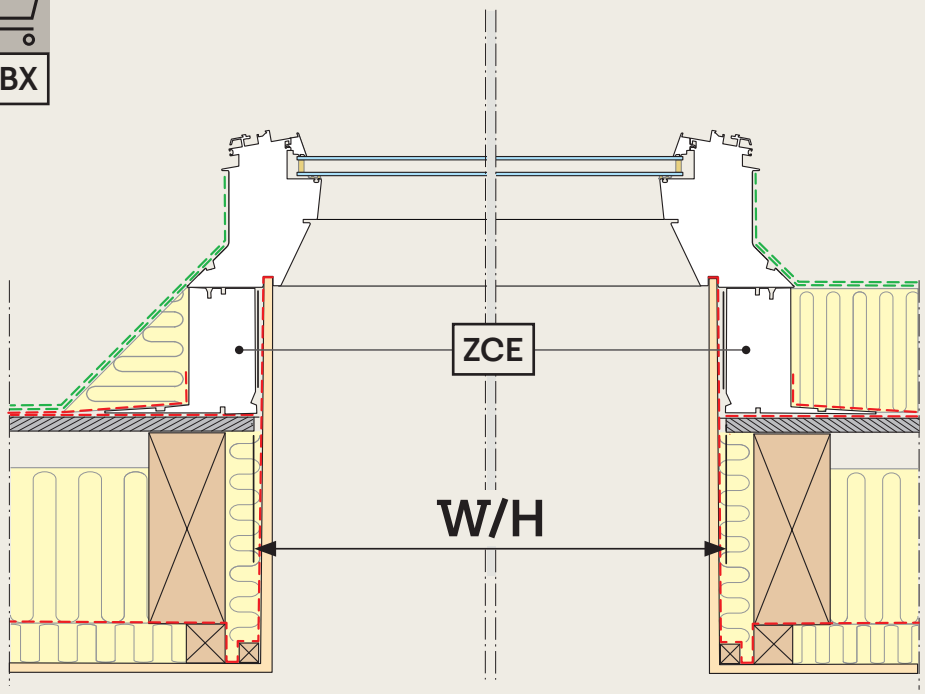

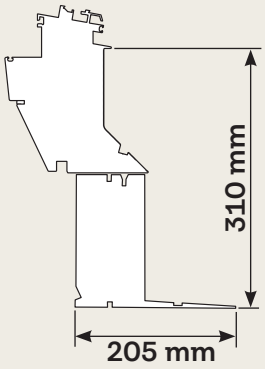

BBX

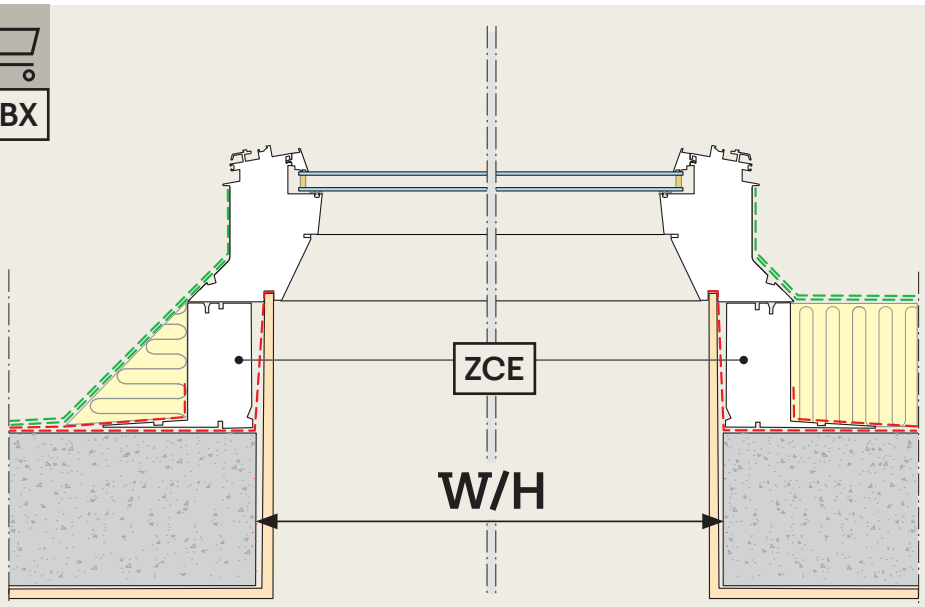

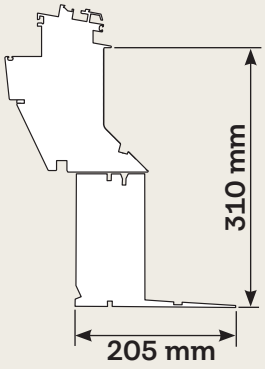

1b

ZCE

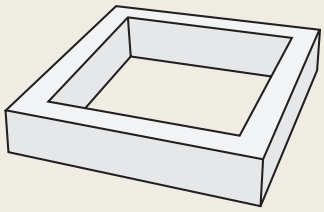

BBX

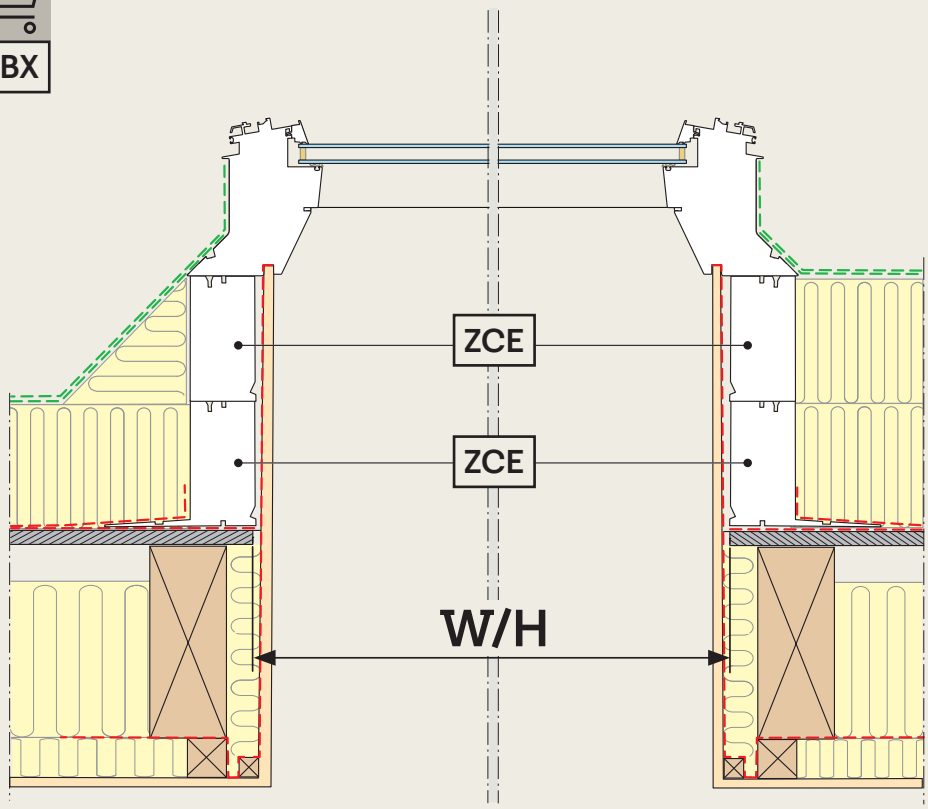

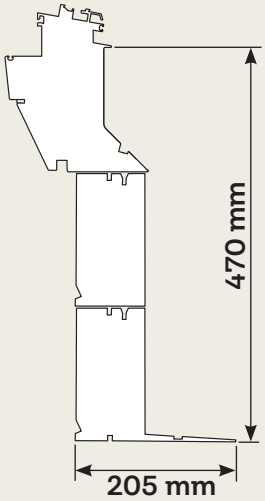

BBX

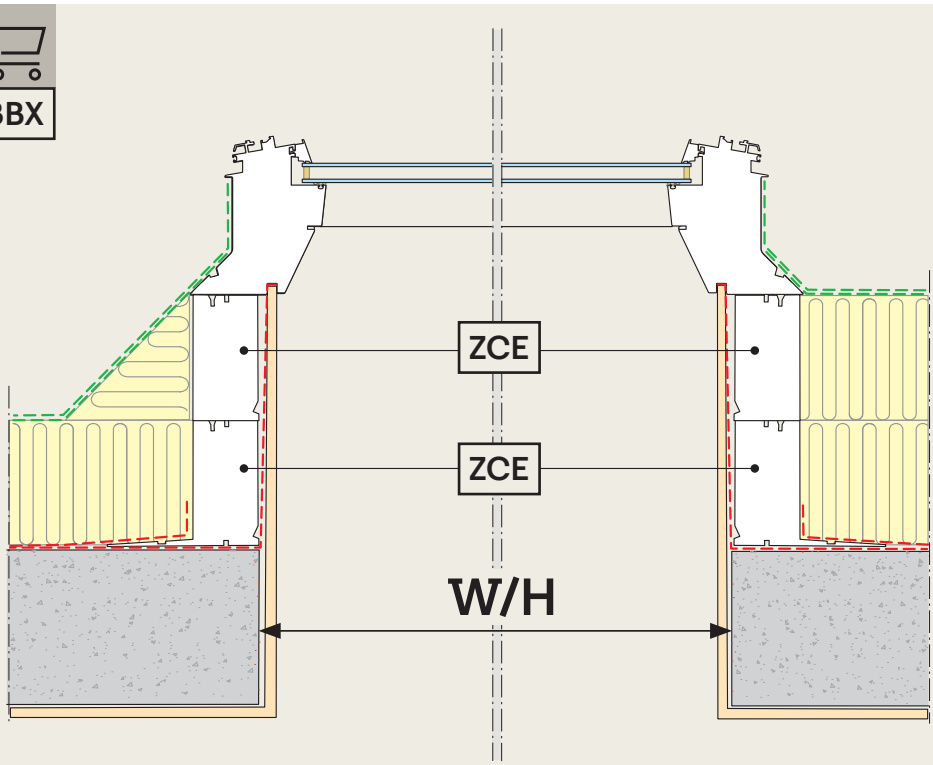

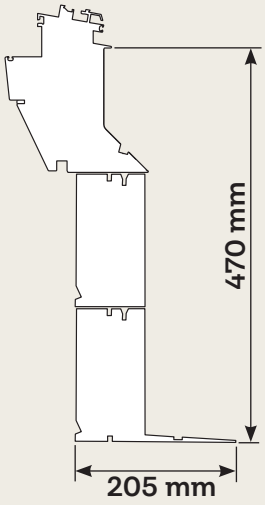

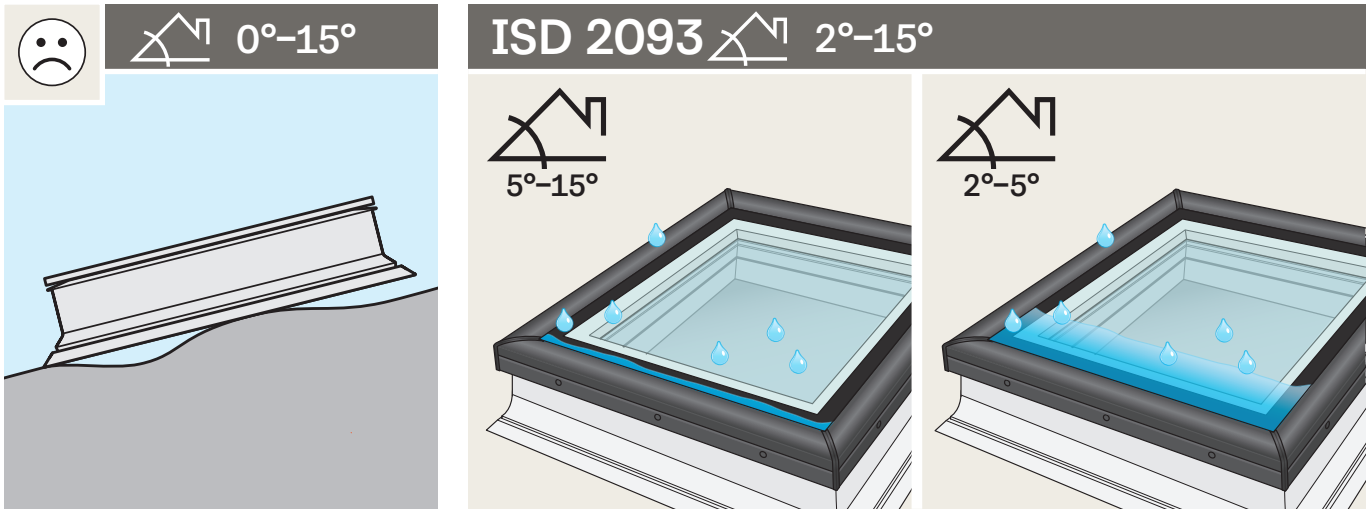
0°–15°
ISD 2093
2°–15°
5°–15°
2°–5°

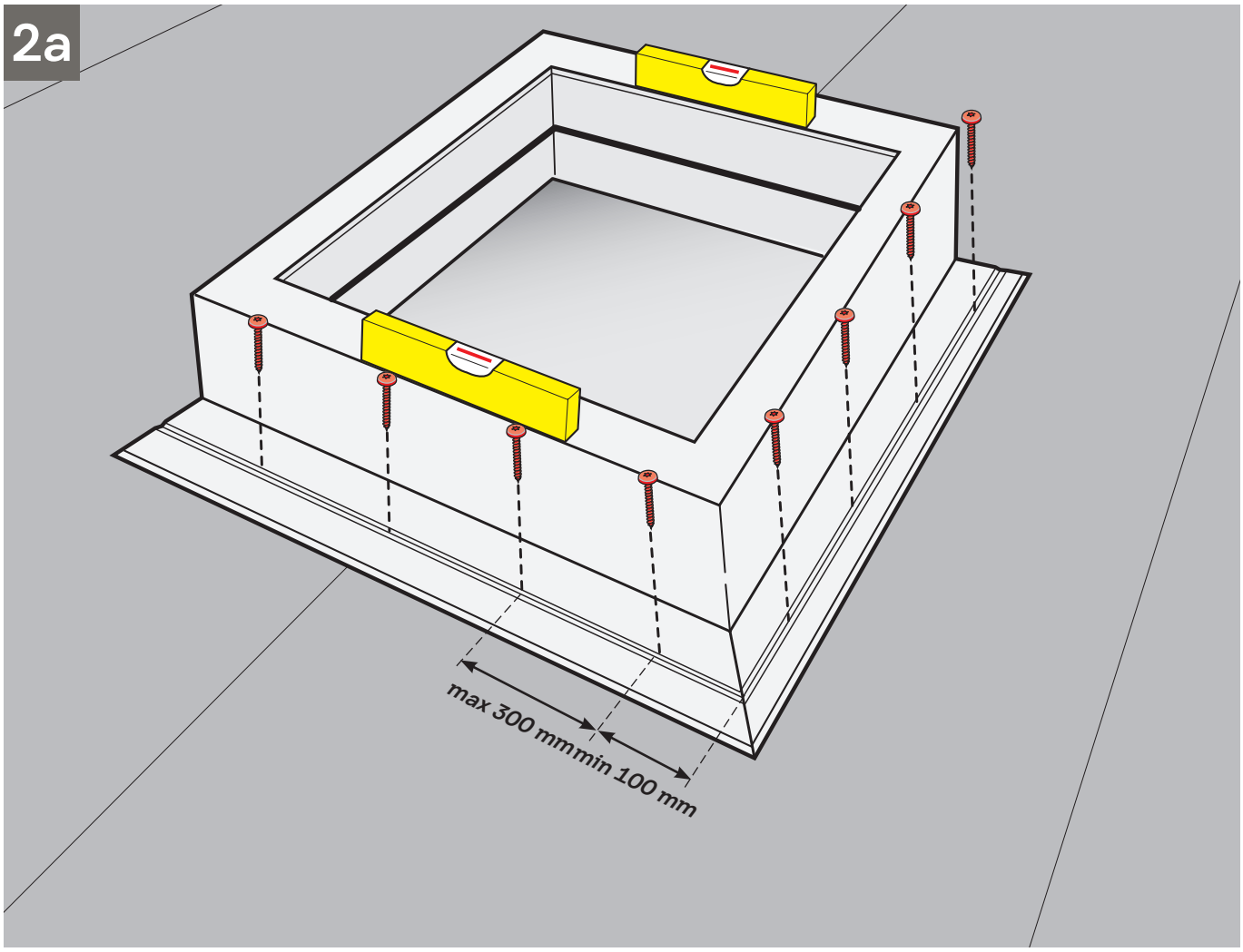
2a
max 300 mm
min 100 mm

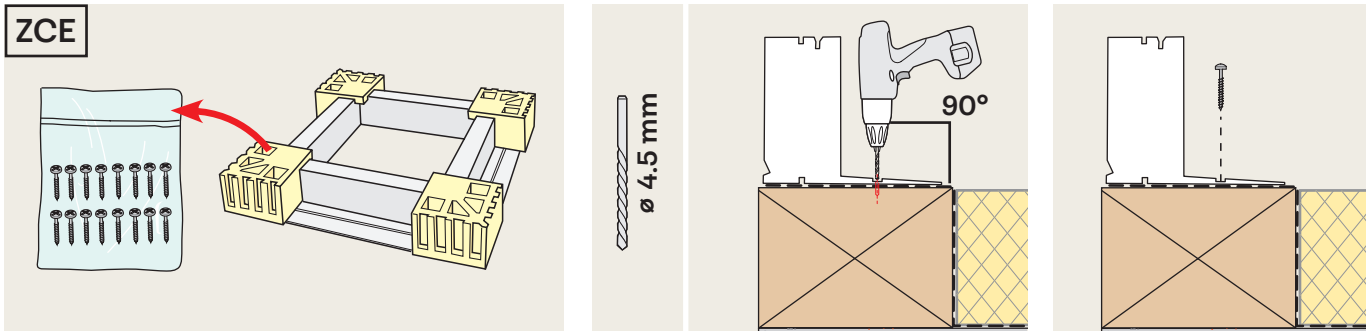
ZCE
ø 4.5 mm
90°

2b

ZCE

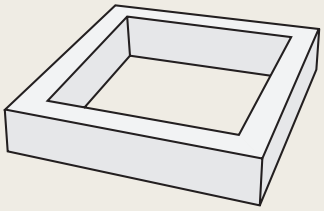

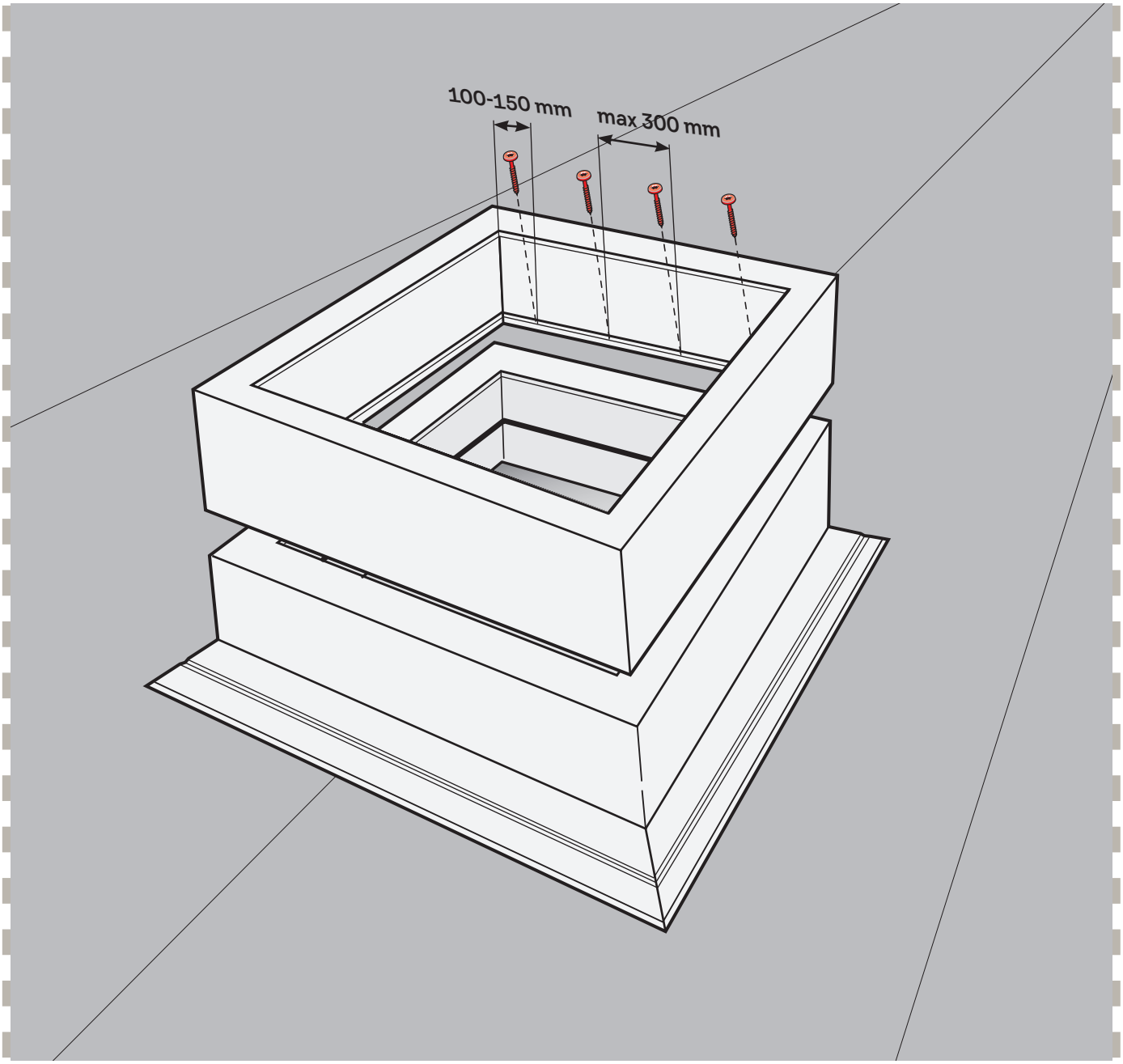

ZCE

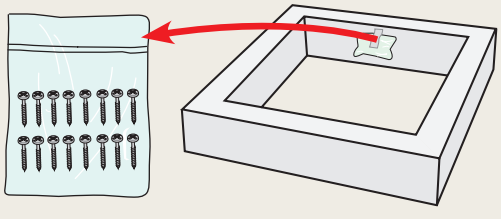



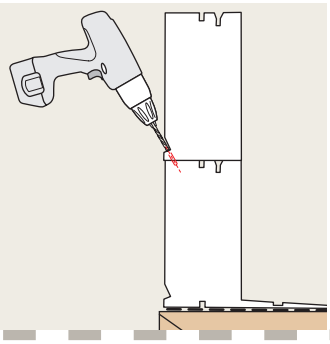

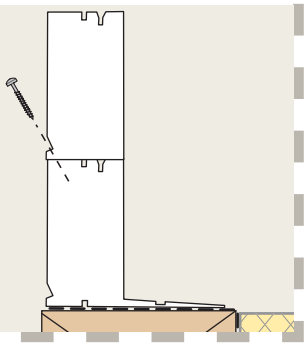

3

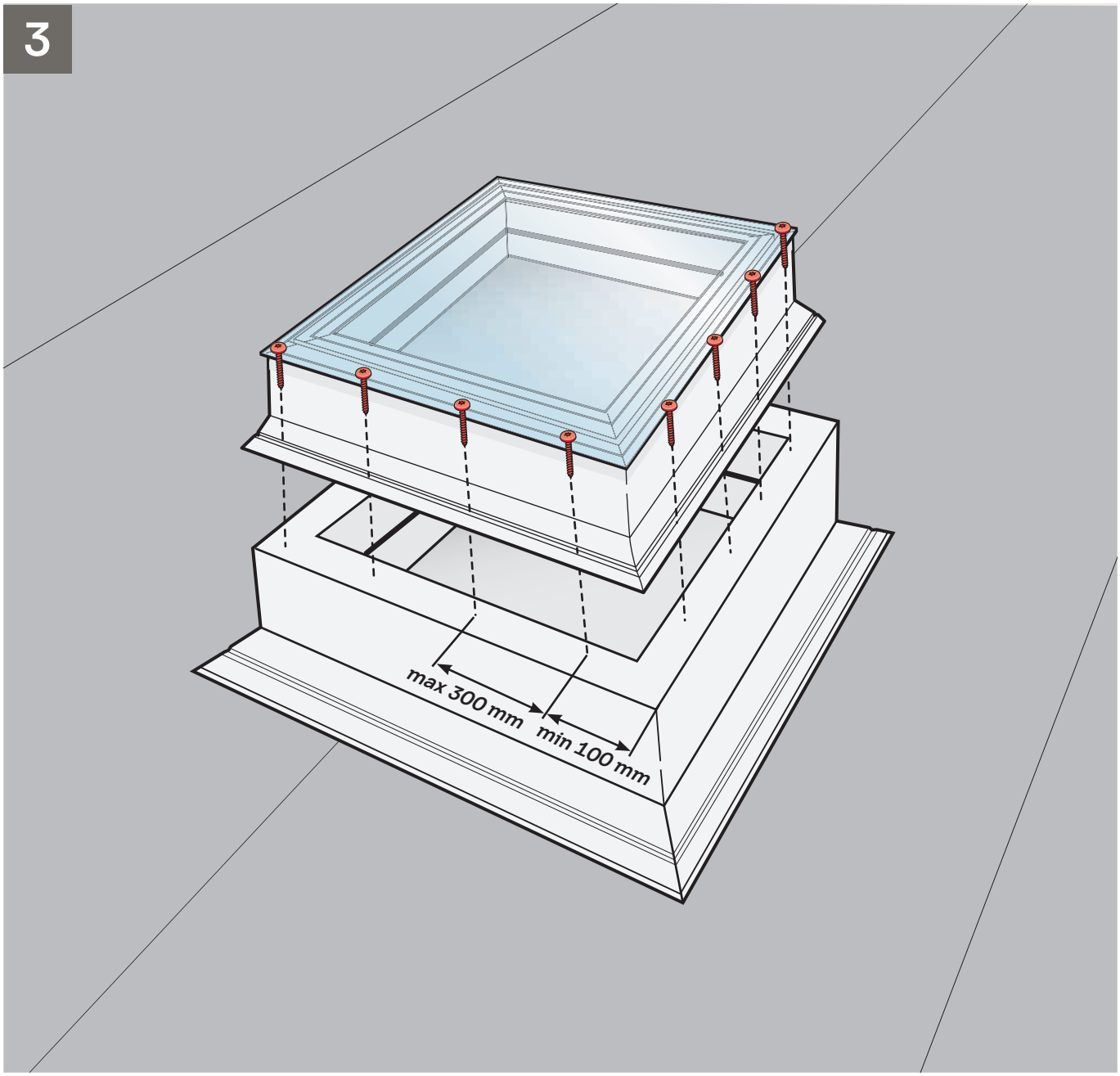

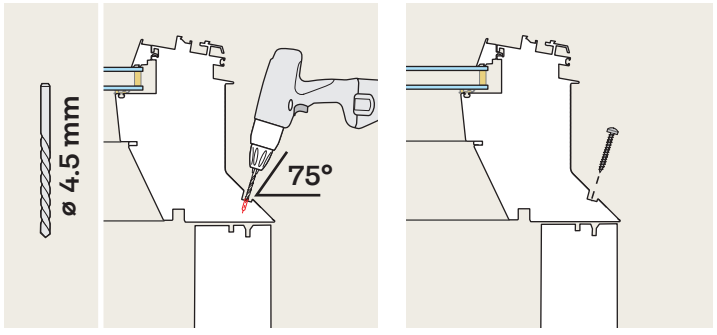

4

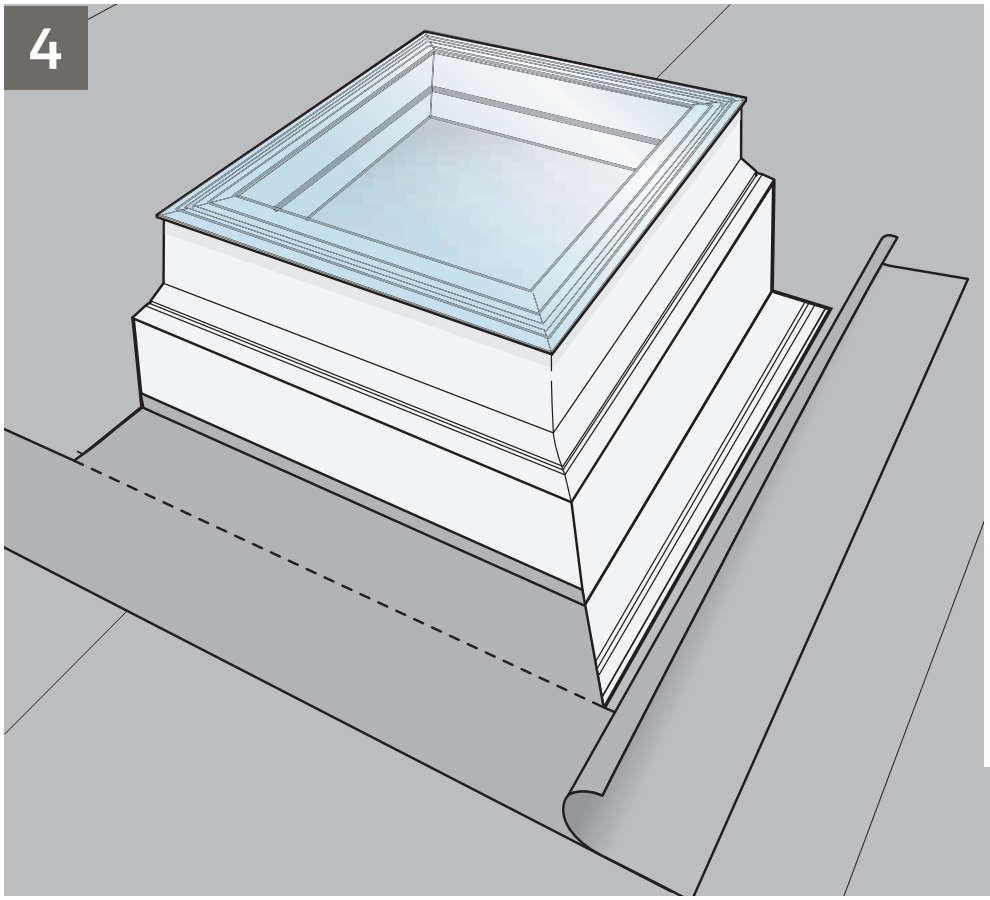



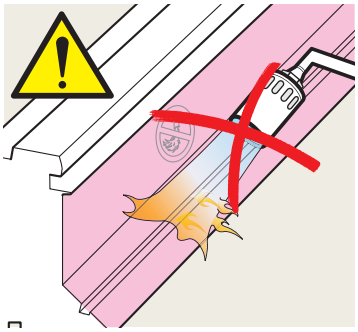

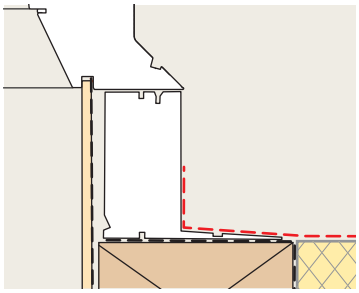

5

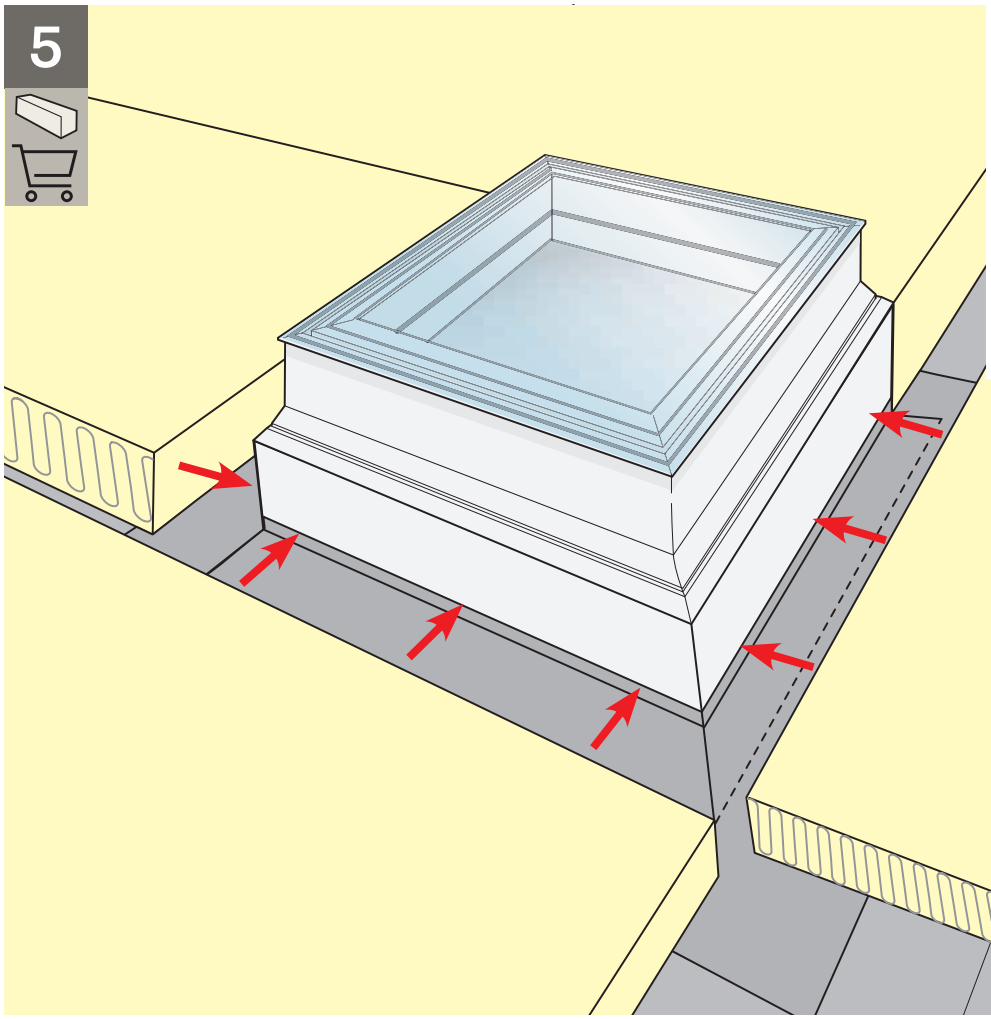

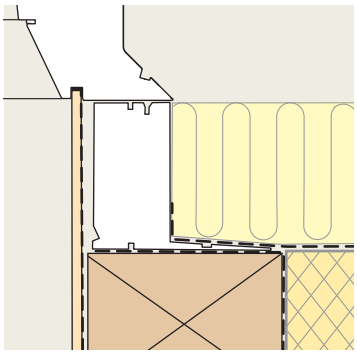

6

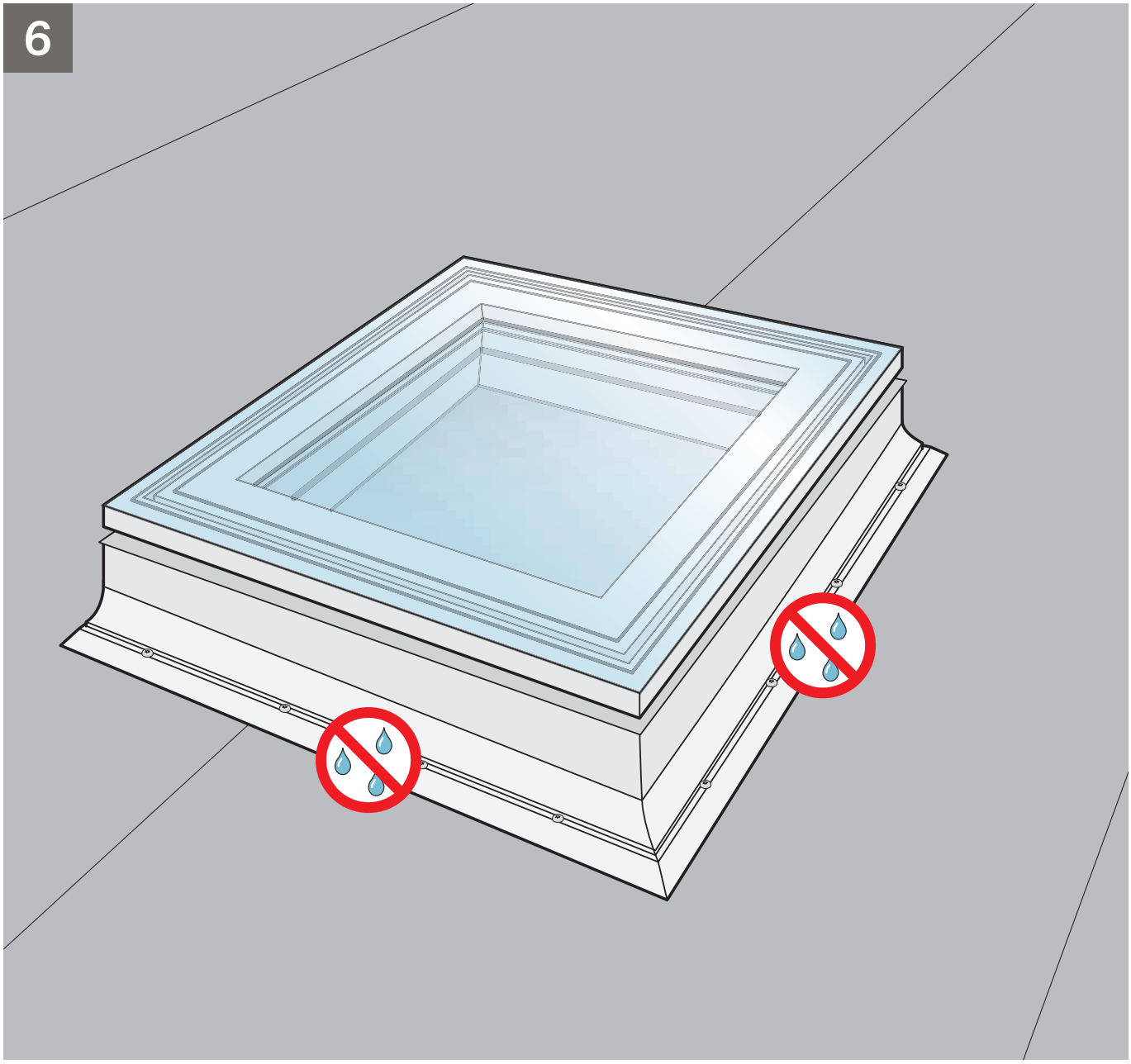



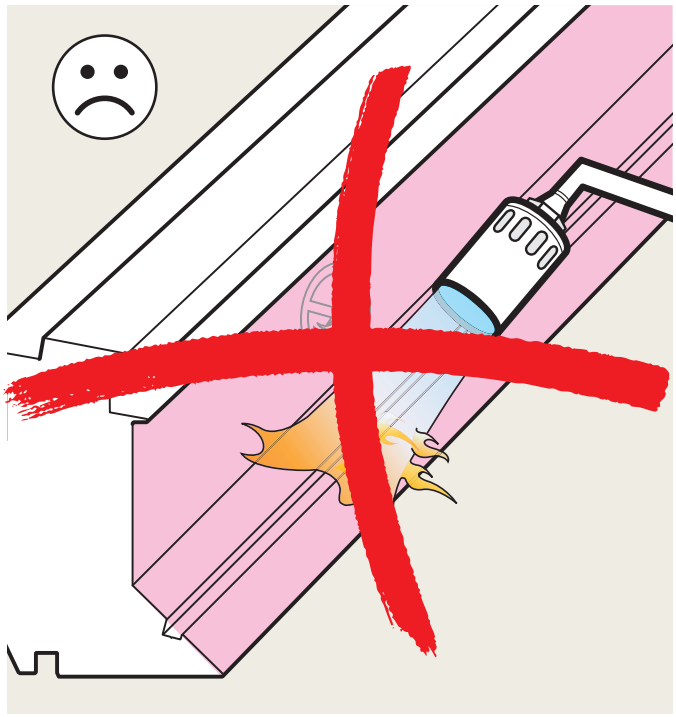

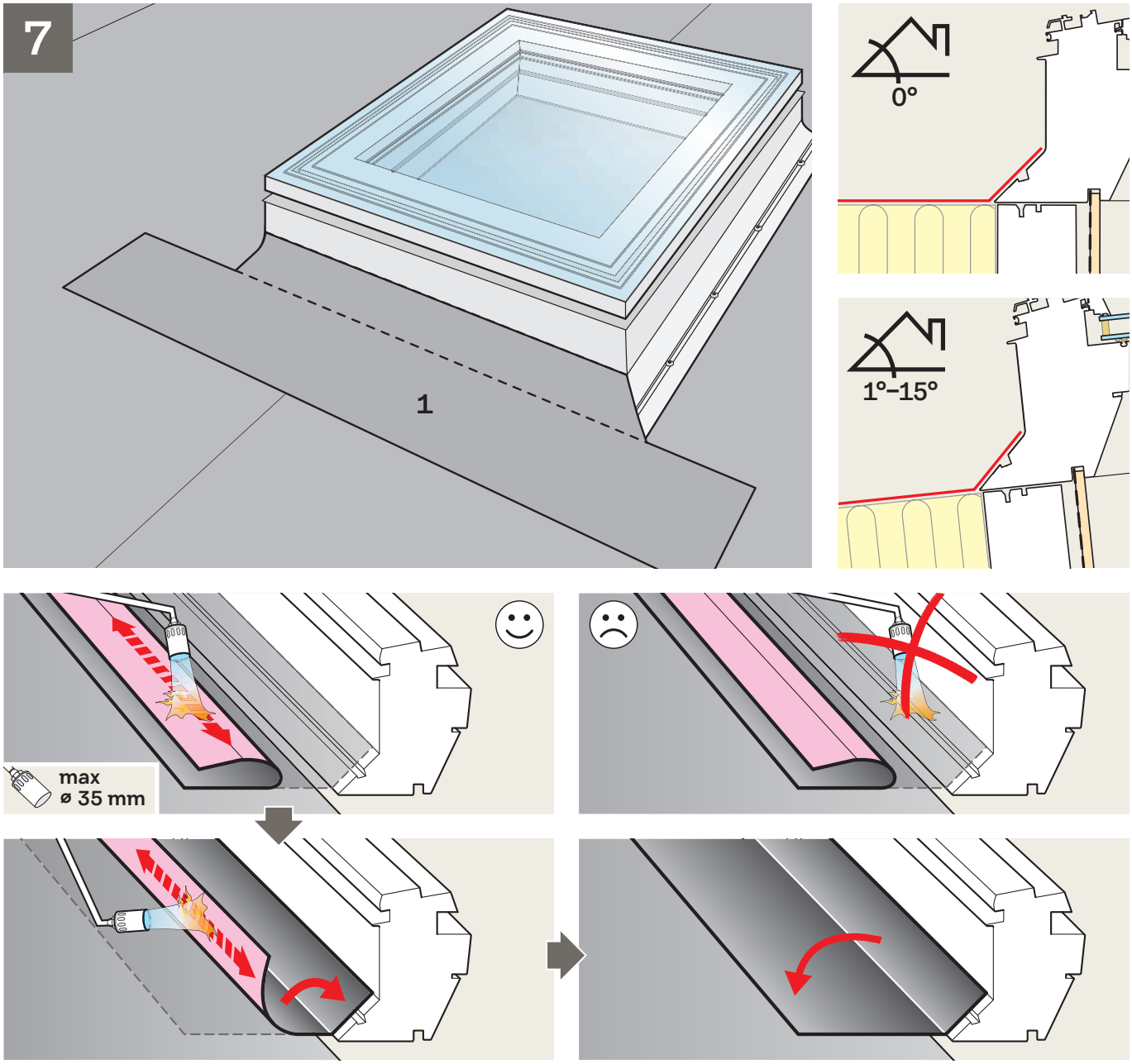
7
1
0°
1°–15°
max
ø 35 mm
8
1
2
2
3

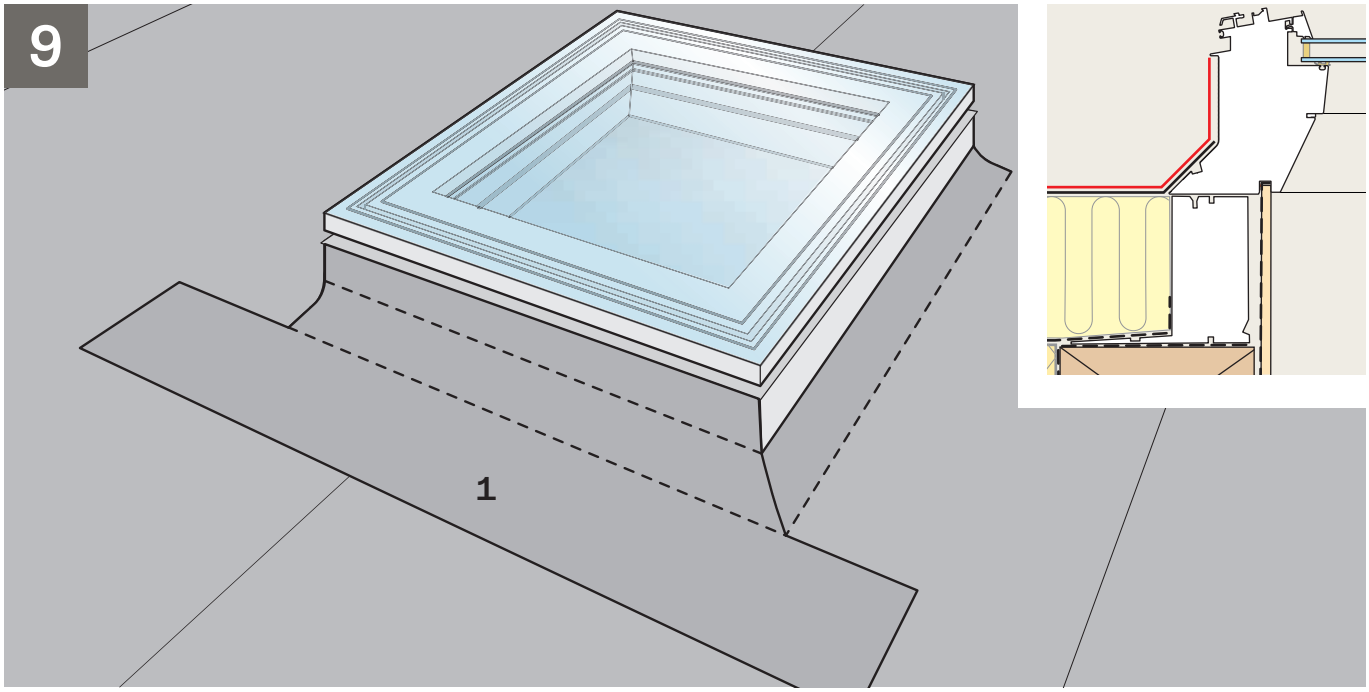
9
1

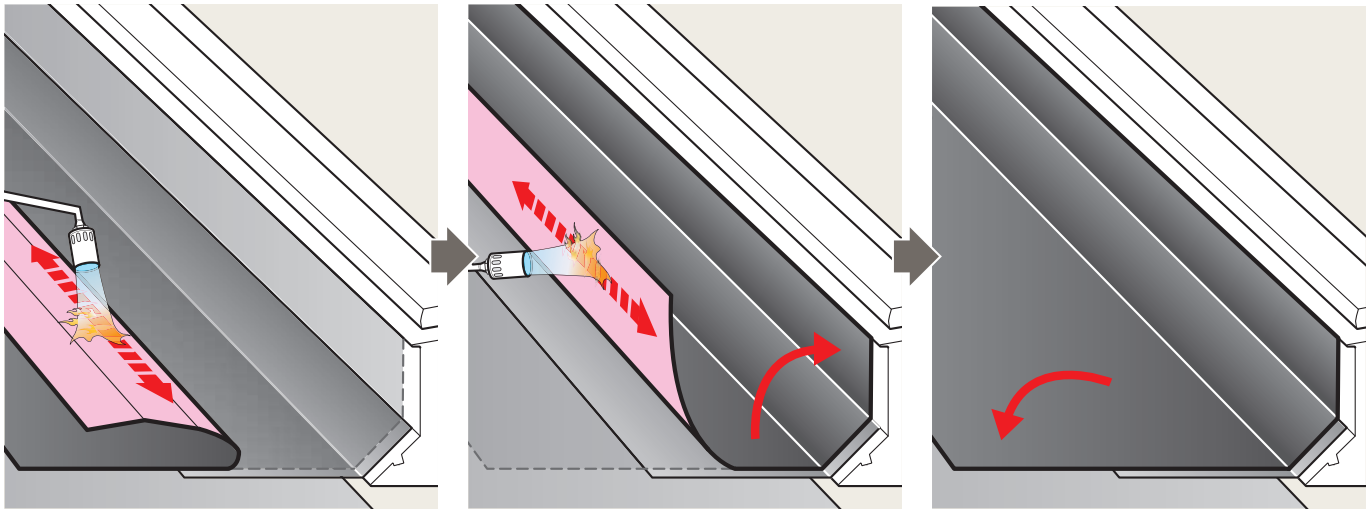

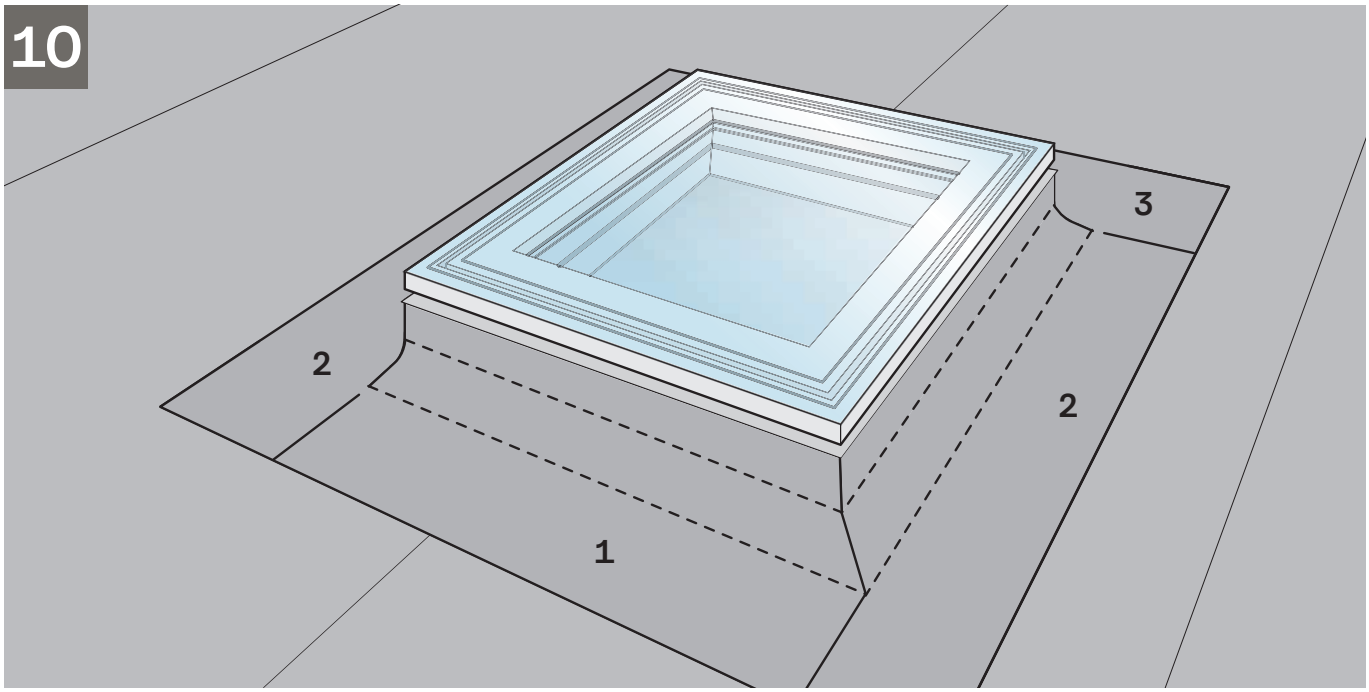
10
3
2
2
1

11

ZZZ 210

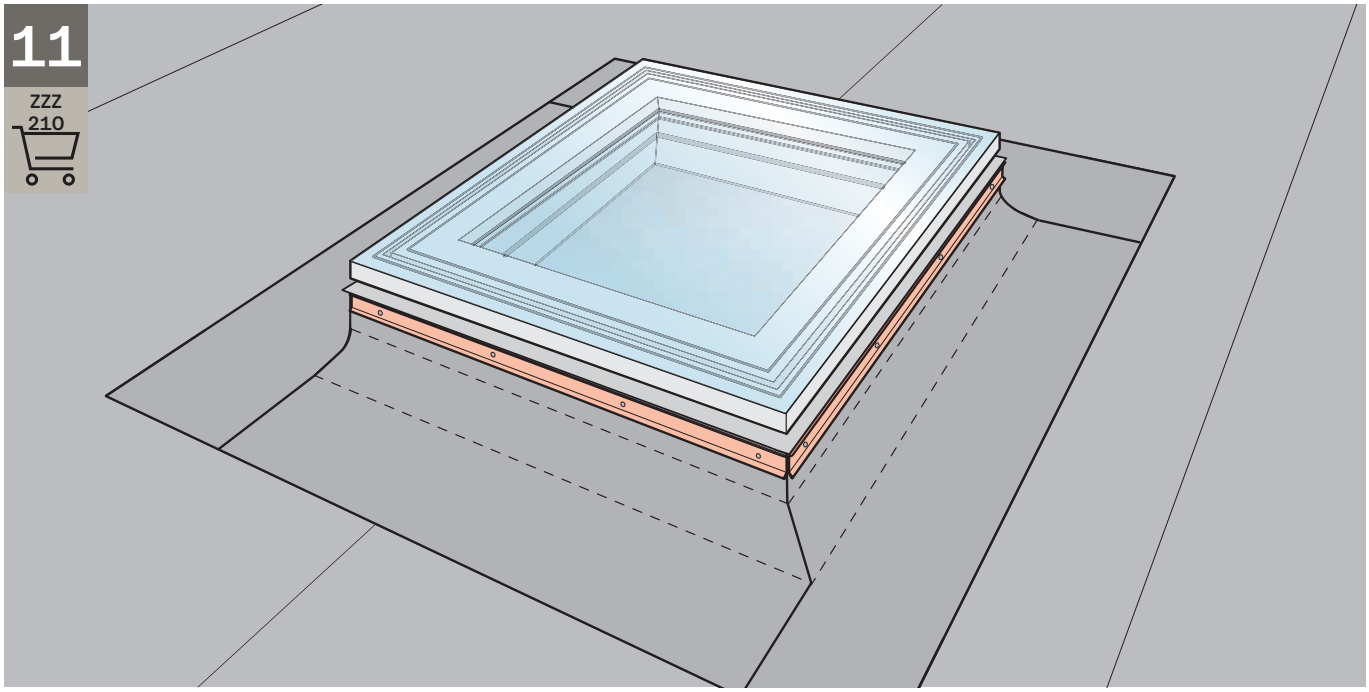

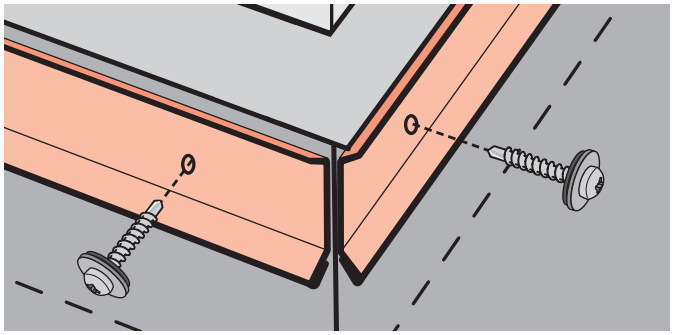

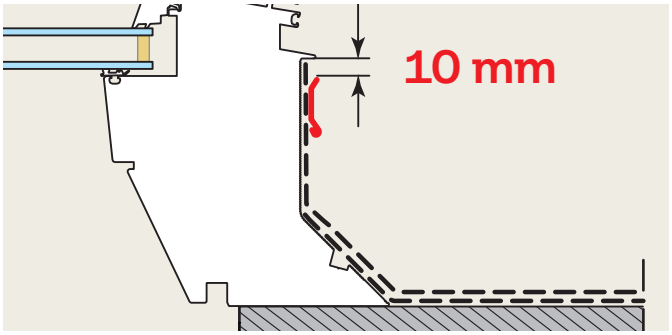

ISD 1093

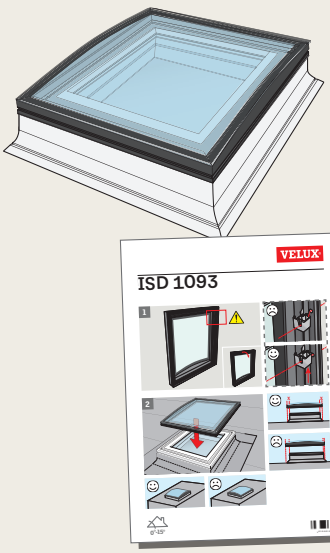

ISD 2093

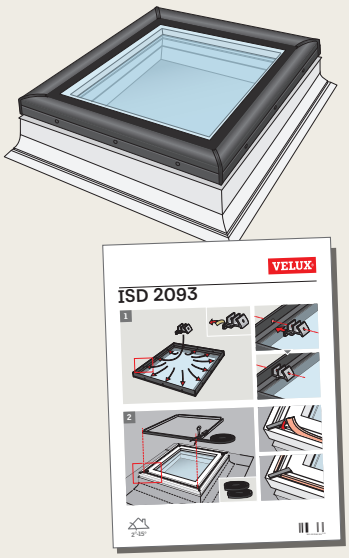

ISD

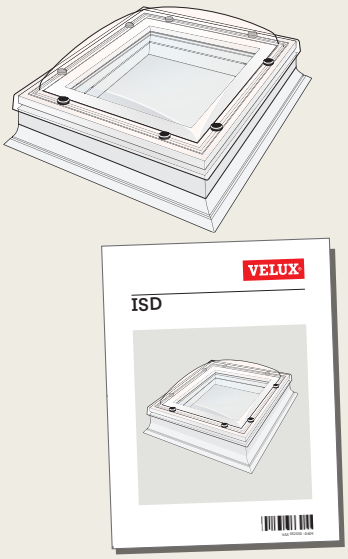

VELUX®

INSTALLATION INSTRUCTIONS FOR CFP+ ISD 1093 / ISD 2093 / ISD, CFP+ ZCE + ISD 1093 / ISD 2093 / ISD. ©2007, 2025 VELUX GROUP. ©VELUX AND THE VELUX LOGO ARE REGISTERED TRADEMARKS USED UNDER LICENCE BY THE VELUX GROUP

velux.com/contact

www.velux.com