VELUX dome ISD 0010



0°-15°

10 Year Guarantee

Available base units



CFP 73QV fixed



CSP 73Q smoke ventilation



CVP 73QV electric



CVP 73U manual



CXP 73Q exit

The VELUX clear polycarbonate dome offers extra impact resistance and fire protection. The clear outer surface and good natural drainage properties deliver a clear and undisturbed view to the outside. Compatible with VELUX blinds for daylight control, light dimming and heat protection.

- Clear dome lets in more natural light for brighter indoor areas and better indoor comfort.
- Enjoy comfortable control of heat and light with our complete selection of blinds for flat-roof windows.
- Enjoy a quieter indoor environment from the efficient sound reduction of outside noises.
- Polycarbonate design delivers additional protection and fire resistance.
- Rain water and leaves are easily drained away, even in roofs with 0° pitch.
- Water and snow drains from the durable plastic dome because of its rounded shape.
- Find the perfect light and shade solution that meets your personal needs.

CE

Creation date 18-11-2025 13:48:55 FRW Top units en-GB - Approved

Application guidance

The dome top unit can be installed with all base units within the roof pitch range of 0° to 15°.

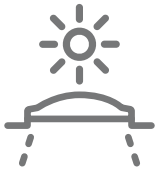

Combine the dome with a base unit that meets your need for daylight and ventilation. Choose the electrically-vented base unit CVP for fresh air at the touch of a button or the fixed base unit CFP if your primary need is to be bring daylight into the room.

Available sizes and daylight area

Compatible Base Units

B CVP 73QV electric
F CVP 73U manual
H CFP 73QV fixed
K CXP 73Q exit
L CSP 73Q smoke ventilation

	600	800	900	1000	1200	1500
600	ISD 060060 (0.19) B, F, H					
800		ISD 080080 (0.40) F, H				
900	ISD 060090 (0.32) B, F, H		ISD 090090 (0.54) B, F, H			
1000				ISD 100100 (0.70) B, F, H, K, L		
1200			ISD 090120 (0.76) F, H, K		ISD 120120 (1.07) F, H, K, L	
1500				ISD 100150 (1.11) B, F, H		ISD 150150 (1.78) H

All measurements are in mm. ( ) = Effective daylight area, m² [ ] = Geometric free area, m²

*A=large sizes with glazing variant -A

Creation date 18-11-2025 13:48:55

Technical values

Overview of technical values for the product, covering among other, CE marking in accordance with EN 1873 or EAD 200062-00-0401

Window characteristics	CFP 63QK + ISD 0010	CFP 73QV + ISD 0010	CFP 73UT + ISD 0010	CSP 73QV + ISD 0010	CVP Electric 63QK + ISD 0010	CVP Electric 73QV + ISD 0010	CVP Electric 73UT + ISD 0010	CVP Manual 73UT + ISD 0010	CXP 73QV + ISD 0010
Air permeability	A3	A3	A3	4	4	4	4	4	4
Thermal transmittance Urc,ref300 (CE-marked) (U-value)	0.87	0.80	0.87	0.99	0.87	0.80	0.87	0.87	0.86
Arc, ref300 (U-value transmission area)	3.4	3.4	3.4	3.4	3.4	3.4	3.4	3.4	3.4
Light transmittance (τ)	0.65	0.70	0.70	0.70	0.65	0.70	0.70	0.70	0.70
Sound insulation R_wdB [dB]	36	36	36	33	36	36	30	30	36
Total solar energy transmittance (g)	0.47	0.50	0.52	0.50	0.47	0.50	0.52	0.52	0.50
Ultraviolet transmittance (τuv)	0.05	0.05	0.05	0.05	0.05	0.05	0.05	0.05	0.05
Burglar resistance window	npd	RC2	npd	RC2	npd	RC2	npd	npd	npd
Frame factor	N/A	N/A	N/A	N/A	N/A	N/A	N/A	N/A	N/A
Air permeability	A3	A3	A3	4	4	4	4	4	4
Reaction to fire	B-s1,d0	B-s1,d0	B-s1,d0	B-s1,d0	B-s1,d0	B-s1,d0	B-s1,d0	B-s1,d0	B-s1,d0
Bonding of cover glass (glass of top unit) [class]	N/A	N/A	N/A	N/A	N/A	N/A	N/A	N/A	N/A
External fire performance - European	npd	npd	npd	npd	npd	npd	npd	npd	npd
External fire performance - British	AA	AA	AA	AA	AA	AA	AA	AA	AA
Impact resistance	N/A	N/A	N/A	N/A	N/A	N/A	N/A	N/A	N/A
Impact resistance large soft body	SB 1200	SB 1200	SB 1200	SB 1200	SB 1200	SB 1200	SB 1200	SB 1200	SB 1200
Impact resistance small hard body	√	√	√	√	√	√	√	√	√
Rain noise	51	56	56	51	50	53	53	50	53
Resistance to downward loads	DL 2500	DL 2500	DL 2500	DL 2500	DL 2500	DL 2500	DL 2500	DL 2500	DL 2500
Resistance to fire	npd	npd	npd	npd	npd	npd	npd	npd	npd
Resistance to snow load	N/A	N/A	N/A	N/A	N/A	N/A	N/A	N/A	N/A
Resistance to upward load	UL 1500	UL 1500	UL 1500	UL 1500	UL 1500	UL 1500	UL 1500	UL 1500	UL 1500
Resistance to wind load	N/A	N/A	N/A	N/A	N/A	N/A	N/A	N/A	N/A
Water tightness	√	√	√	√	√	√	√	√	√

NPD: No performance determined

Creation date 18-11-2025 13:48:55

VELUX flat-roof smoke ventilation window CSP, Glazing 73FQV



The flat-roof smoke ventilation window CSP will automatically open in case of fire and meets all relevant EU legislative requirements. The window can be opened for fresh air when ventilation is needed. A burglar-proof construction provides additional security and a laminated inner pane prevents glass from splintering in the event of breakage.

- Tilted interior frame design increases the amount of daylight that enters your room.
- The maintenance-free white PVC base unit reflects more natural light to brighten your room.
- The high-quality motor opens quickly and quietly to provide fresh outside air.

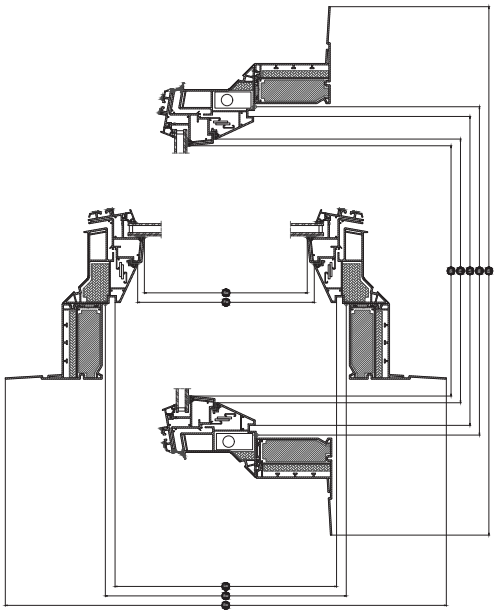

Width		100	120
Sw	Sash aperture width	835	1035
Fw	Frame aperture width	863	1063
Lw	Inside groove measure width	959	1159
Rw	Roof opening width	1000	1200
Ew	External frame width	1180	1380

Height		100	120
Sh	Sash aperture height	835	1035
Fh	Frame aperture height	863	1063
Lh	Inside groove measure height	959	1159
Rh	Roof opening height	1000	1200
Eh	External frame height	1180	1380

Creation date 18-11-2025 13:48:55

VELUX flat-roof window CFP Q, Glazing 73FQV



The fixed base unit CFP Q transforms any space from dark and dull to bright and beautiful. A burglary-resistant construction delivers maximum security while an insulated ThermoTechnology™ construction and low-energy glazing with energy coatings help keep your home warm and energy costs low. Compatible with all VELUX flat-roof top units.

- Tilted interior frame design increases the amount of daylight that enters your room.
- ThermoTechnologyTM insulation and double-glazed glazing deliver enhanced energy efficiency.
- The maintenance-free white PVC base unit reflects more natural light to brighten your room.

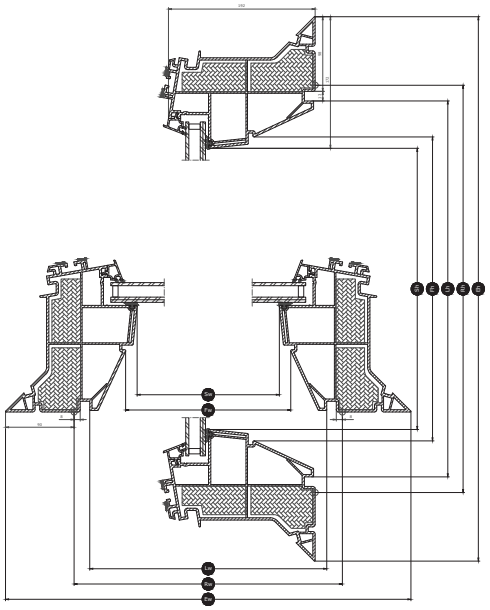

Width		060	080	090	100	120	150
Sw	Sash aperture width	435	635	735	835	1035	1335
Fw	Frame aperture width	463	663	763	863	1063	1363
Lw	Inside groove measure width	559	759	859	959	1159	1459
Rw	Roof opening width	600	800	900	1000	1200	1500
Ew	External frame width	780	980	1080	1180	1380	1680

Height		060	080	090	100	120	150
Sh	Sash aperture height	435	635	735	835	1035	1035
Fh	Frame aperture height	463	663	763	863	1063	1063
Lh	Inside groove measure height	559	759	859	959	1159	1459
Rh	Roof opening height	600	800	900	1000	1200	1500
Eh	External frame height	780	980	1080	1180	1380	1680

Creation date 18-11-2025 13:48:55

VELUX flat-roof exit window CXP, Glazing 73FQV



The manually operated flat-roof exit window CXP opens extra wide to provide easy access to the roof. A laminated inner pane prevents glass from splintering in the event of breakage. Available with an acrylic and polycarbonate dome. The flat-roof exit window meets all relevant EU legislative requirements.

- Tilted interior frame design increases the amount of daylight that enters your room.
- The maintenance-free white PVC base unit reflects more natural light to brighten your room.
- Repairs can be performed without replacing the entire window thanks to the modular design.

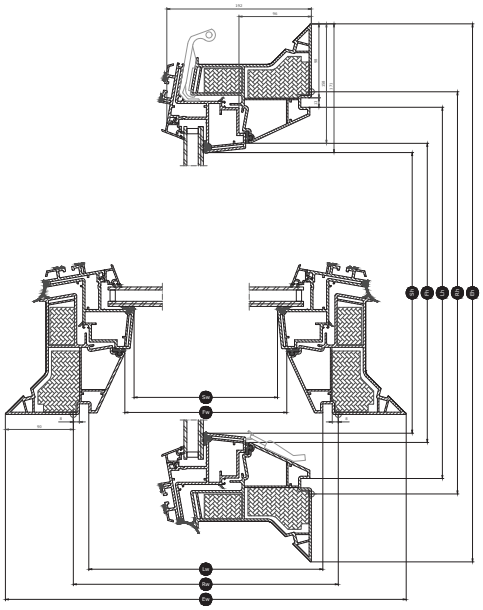

Width		090	100	120
Sw	Sash aperture width	735	835	1035
Fw	Frame aperture width	763	863	1063
Lw	Inside groove measure width	859	959	1159
Rw	Roof opening width	900	1000	1200
Ew	External frame width	1080	1180	1380

Height		100	120
Sh	Sash aperture height	835	1035
Fh	Frame aperture height	863	1063
Lh	Inside groove measure height	959	1159
Rh	Roof opening height	1000	1200
Eh	External frame height	1180	1380

Creation date 18-11-2025 13:48:55

VELUX manually operated flat-roof window CVP 0073U, Glazing 73UT



Add natural daylight and fresh air to your home at a price that matches most budgets with the manually operated base unit CVP. The flat-roof window is easily operated using a practical telescopic rod. Offers all the basic benefits of a flat-roof window at an attractive price. Compatible with our acrylic and polycarbonate domes.

- Tilted interior frame design increases the amount of daylight that enters your room.
- ThermoTechnologyTM insulation and double-glazed glazing increases overall energy-efficiency.
- The maintenance-free white PVC base unit reflects more natural light to brighten your room.

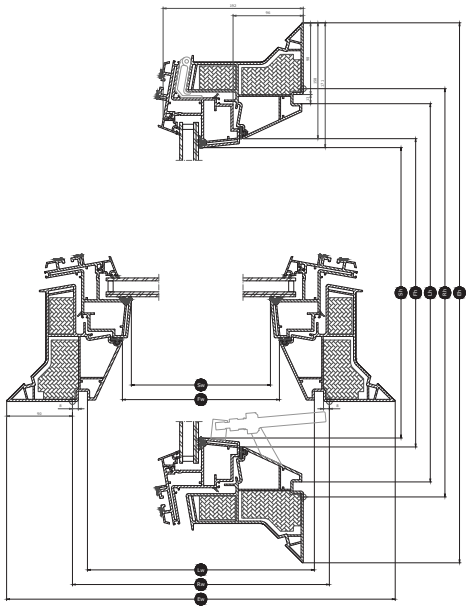

Width		060	080	090	100	120
Sw	Sash aperture width	435	635	735	835	1035
Fw	Frame aperture width	463	663	763	863	1063
Lw	Inside groove measure width	559	759	859	959	1159
Rw	Roof opening width	600	800	900	1000	1200
Ew	External frame width	780	980	1080	1180	1380

Height		060	080	090	100	120	150
Sh	Sash aperture height	435	635	735	835	1035	1035
Fh	Frame aperture height	463	663	763	863	1063	1063
Lh	Inside groove measure height	559	759	859	959	1159	1459
Rh	Roof opening height	600	800	900	1000	1200	1500
Eh	External frame height	780	980	1080	1180	1380	1680

Creation date 18-11-2025 13:48:55

VELUX burglary-resistant electric flat-roof window CVP ----QA, Glazing 73FQV



Enjoy ultimate convenience and remote-controlled ventilation with an electric base unit CVP QA. A burglary-resistant construction with P4A laminated inner glass delivers maximum security, while the insulated ThermoTechnologyTM PVC construction and low-energy glazing with two energy coatings help keep your home warm and energy costs low. Compatible with all our top units.

- Tilted interior frame design increases the amount of daylight that enters your room.
- The wall switch is pre-paired to work with your window right out of the box.
- ThermoTechnologyTM insulation and double-glazed glazing deliver enhanced energy efficiency.

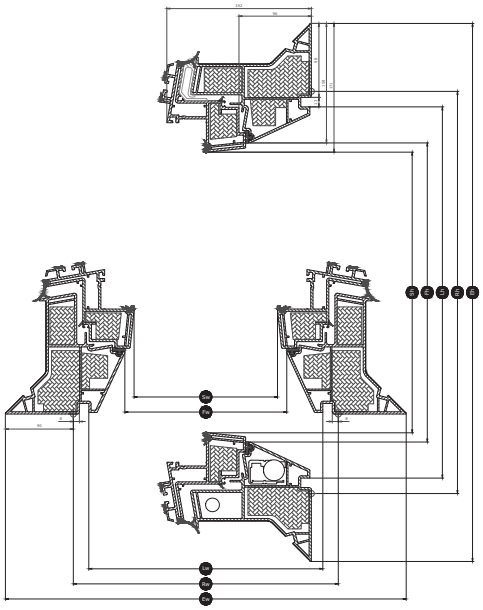

Width		060	080	090	100	120	150
Sw	Sash aperture width	435	635	735	835	1035	1335
Fw	Frame aperture width	463	663	763	863	1063	1363
Lw	Inside groove measure width	559	759	859	959	1159	1459
Rw	Roof opening width	600	800	900	1000	1200	1500
Ew	External frame width	780	980	1080	1180	1380	1680

Height		060	080	090	100	120	150
Sh	Sash aperture height	435	635	735	835	1035	1035
Fh	Frame aperture height	463	663	763	863	1063	1063
Lh	Inside groove measure height	559	759	859	959	1159	1459
Rh	Roof opening height	600	800	900	1000	1200	1500
Eh	External frame height	780	980	1080	1180	1380	1680

Creation date 18-11-2025 13:48:55

Insulating glass unit structure

	Glazing 73FQV	Glazing 73UT
Variant composition	7.5mm laminated float glass - 14.5mm Argon - 4mm float glass	6.8 mm laminated float glass - 14,5 mm Argon - 4 mm float glass

Cleaning and maintenance



Cleaning of the top unit is only possible from the outside. When cleaning the top unit, do not open the window. For electrical windows, switch off the mains supply.
To clean inner surface of top unit and outer glass surface of base unit, remove cover caps and screws to remove the top unit and fasten again after cleaning.
In regions with heavy snowfall, snow masses on the flat-roof window must be removed on a regular basis.

Guarantee period



The full terms and conditions of the VELUX Product Guarantee are available on our website www.velux.co.uk or www.velux.ie

Blinds and awnings

Complete your VELUX flat roof window with a blind for complete comfort. Choose from a range of blinds, including a translucent pleated blind for softening the light, anti-heat blind for heat protection and blackout energy pleated blind for darkening the room.
Use VELUX App Control or VELUX ACTIVE with NETATMO for smartphone control of your vented flat roof window and blinds.

Creation date 18-11-2025 13:48:55

Further information

We reserve the right to make technical changes.

For more information on our products, please visit https://www.velux.co.uk or https://www.velux.ie.

Creation date 18-11-2025 13:48:55