ISU 1093/2093

ISU 1093



0°–15°

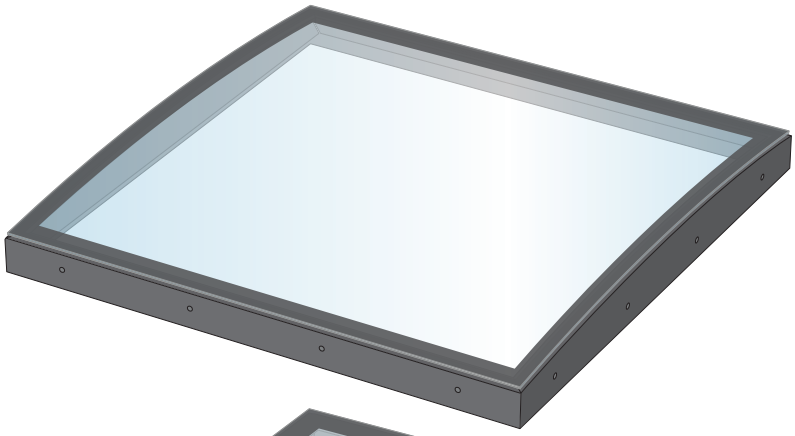

ISU 2093



2°–15°

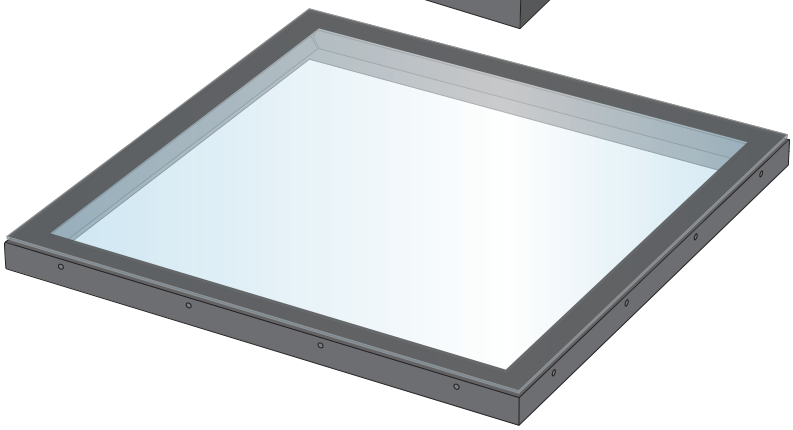

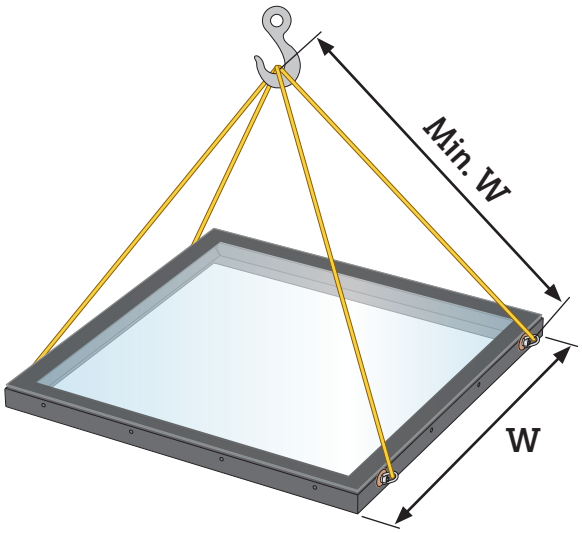

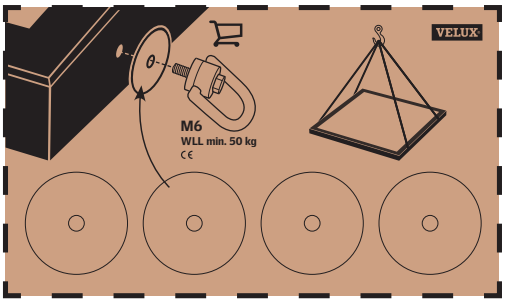

VELUX®

homecontrol®

VAS 454636-2025-02

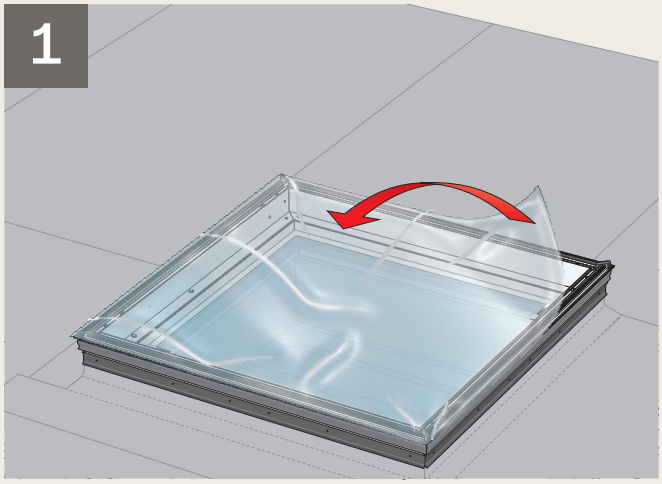

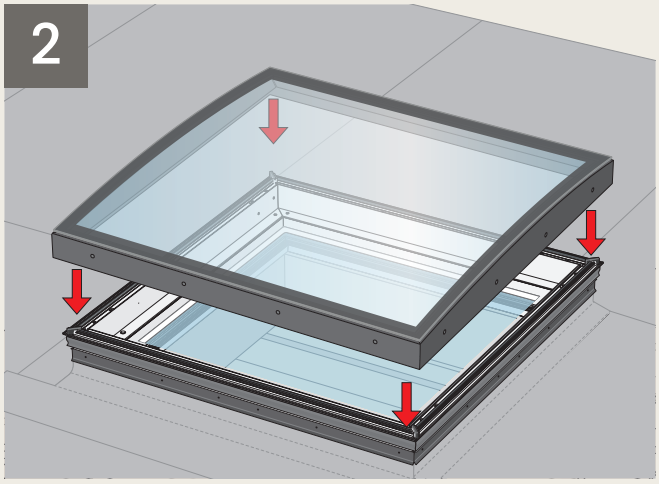

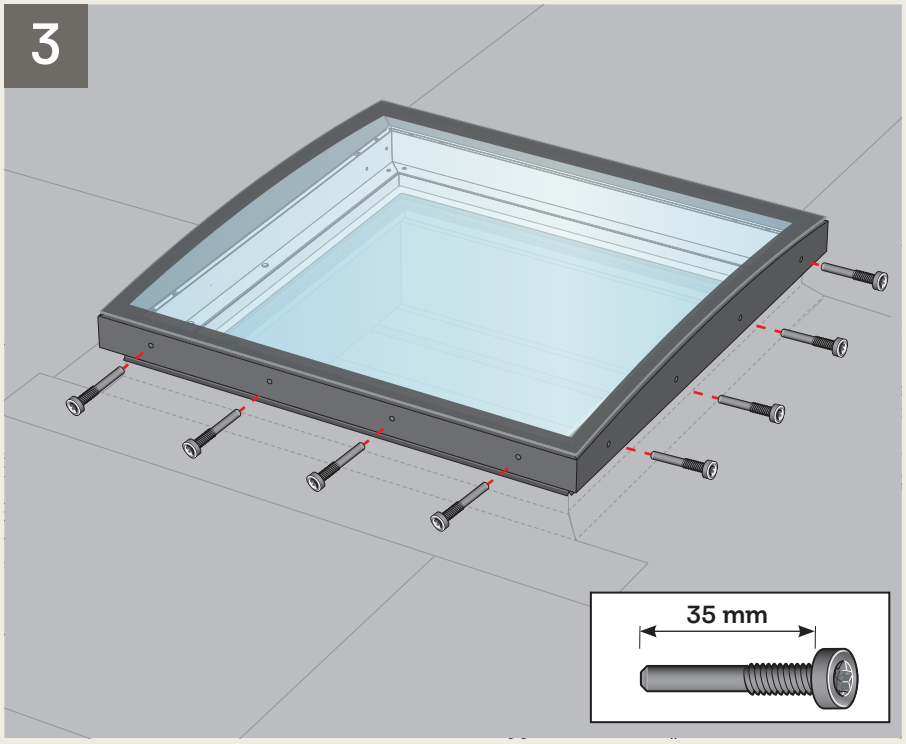

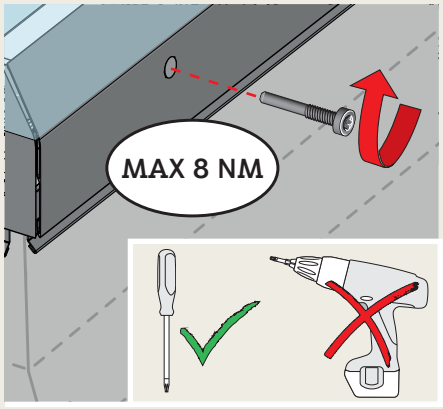

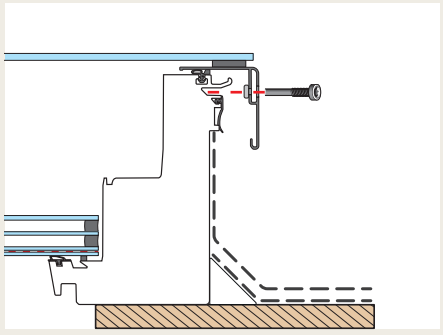

AR: VELUX Export (VELUX A/S)
+ 45 4516 7885

AT: VELUX Österreich GmbH
02245/32 3 50

AU: VELUX Australia Pty. Ltd.
1300 859 856

BA: VELUX Bosna i Hercegovina d.o.o.
033/626 493, 626 494

BE: VELUX Belgium
(010) 42.09.09

BG: ВЕЛУКС България ЕООД
02/955 99 30

CA: VELUX Canada Inc.
1 800 88-VELUX (888-3589)

CH: VELUX Schweiz AG
062 289 44 45

CL: VELUX Export (VELUX A/S)
+ 45 4516 7885

CN: VELUX (CHINA) CO. LTD.
0316-607 27 27

CZ: VELUX Česká republika, s.r.o.
531 015 511

DE: VELUX Deutschland GmbH
www.velux.de/kontakt

DK: VELUX Danmark A/S
45 16 45 16

EE: VELUX Eesti OÜ
621 7790

ES: VELUX Spain, S.A.U.
91 509 71 00

FR: VELUX France
0806 80 15 15
Service gratuit + prix appel

GB: VELUX Company Ltd.
01592 778 225

HR: VELUX Hrvatska d.o.o.
01/5555 444

HU: VELUX Magyarország Kft.
(06/1) 436-0601

IE: VELUX Company Ltd.
01 848 8775

IT: VELUX Italia s.p.a.
045/6173666

JP: VELUX-Japan Ltd.
0570-00-8141

KR: VELUX Export (VELUX A/S)
+ 45 4516 7885

LT: VELUX Lietuva, UAB
(85) 270 91 01

LV: VELUX Latvia SIA
67 27 77 33

NL: VELUX Nederland B.V.
030 - 6 629 629

NO: VELUX Norge AS
22 51 06 00

NZ: VELUX New Zealand Ltd.
0800 650 445

PL: VELUX Polska Sp. z o.o.
(022) 33 77 000 / 33 77 070

PT: VELUX Portugal, Lda
21 880 00 60

RO: VELUX România S.R.L.
0268-402740

RS: VELUX Srbija d.o.o.
011 20 57 500

SE: VELUX Svenska AB
042/20 83 80

SI: VELUX Slovenija d.o.o.
01 724 68 68

SK: VELUX Slovensko, s.r.o.
(02) 33 000 555

TR: VELUX Çatı Pencereleri
Ticaret Limited Şirketi
0 216 302 54 10

UA: ТОВ "ВЕЛЮКС Україна"
(044) 2916070

US: VELUX America LLC
1-800-88-VELUX

www.velux.com

INSTALLATION INSTRUCTIONS FOR ISU 1093/2093. ©2020, 2025 VELUX GROUP. VELUX, THE VELUX LOGO ARE REGISTERED TRADEMARKS USED UNDER LICENCE BY THE VELUX GROUP