VELUX flat glass ISU 2093



2°-15°

10 Year Guarantee

Available base units



CFU 20Q fixed



CFU 25Q fixed



CVU 20Q electric



CVU 20Q solar



CVU 25Q solar

20=double-glazed, 25=triple-glazed

The VELUX flat glass rooflight top unit has an elegant glass-to-edge flat shape with straight lines that almost becomes one with the roof. The outer glass is toughened making this a highly durable top unit that has increased resistance to wind, snow and hail. The flat glass top unit can be installed in roof pitches from 2°- 15° and is compatible with all glass rooflight base units (CFU/CVU).

- Sleek modern edge-to-edge flat glass design blends seamlessly with the lines of your roof.
- Suitable for the majority of flat roofs down to 2° roof pitch and offers natural drainage at 5°.
- The outer glass of the top unit is strength-tested in tough weather conditions.
- Toughened outer glass is attached with high-strength weather-proof sealant.
- Discretely placed blackout or awning blind lets you enjoy maximum daylight influx and a stylish interior design at all times.
- Easy and safe transportation of the top unit from ground to roof; no need for manual lifting.
- Special threaded installation screws for fast installation of the top unit.

CE

FRW Top units en-GB - Approved
Creation date 18-11-2025 13:56:24

Application guidance

The flat glass top unit ISU 2093 can be installed with all new generation base units within the roof pitch range of 2-15 degrees.

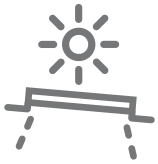

Combine the flat glass top unit with a base unit that meets your need for daylight and ventilation. Choose the electrically vented base unit for glass rooflight CVU for fresh air at the touch of a button or the fixed base unit for glass rooflight CFU if your primary need is to bring daylight into the room.

Available sizes and daylight area

Compatible Base Units

E	CVU 20Q electric	K	CVU 25Q solar	N	CFU 20Q fixed, A*
I	CVU 20Q solar	L	CVU 25Q solar, A*	O	CFU 25Q fixed
J	CVU 20Q solar, A*	M	CFU 20Q fixed	P	CFU 25Q fixed, A*

	600	800	900	1000	1200	1500	2000
600	ISU 060060 (0.29) I, K, M, O		ISU 090060 (0.45) I, K, M, O				ISU 200060 (1.04) J, L, N, P
800		ISU 080080 (0.54) I, K, M, O				ISU 150080 (1.06) I, K, M, O	
900			ISU 090090 (0.70) I, K, M, O		ISU 120090 (0.95) I, K, M, O		
1000				ISU 100100 (0.88) I, K, M, O		ISU 150100 (1.35) I, K, M, O	ISU 200100 (1.82) J, L, N, P
1200					ISU 120120 (1.3) E, I, K, M, O	ISU 150120 (1.64) J, L, N, P	
1500						ISU 150150 (2.07) J, L, N, P	

All measurements are in mm. ( ) = Effective daylight area, m^2 [ ] = Geometric free area, m^2

*A=large sizes with glazing variant -A

Creation date 18-11-2025 13:56:24

Technical values

Overview of technical values for the product, covering among other, CE marking in accordance with EN 1873 or EAD 200062-00-0401

Window characteristics	CFU 20Q + ISU 2093	CFU 25Q + ISU 2093	CVU 20Q + ISU 2093	CVU 20U + ISU 2093	CVU 25Q + ISU 2093	CVU 25U + ISU 2093	CXU 20U + ISU 2093	CXU 25U + ISU 2093
Air permeability	4	4	4	4	4	4	4	4
Thermal transmittance Urc,ref300 (CE-marked) (U-value)	0.75	0.60	0.75	0.75	0.60	0.60	0.80	0.70
Arc, ref300 (U-value transmission area)	4.1	4.1	4.1	4.1	4.1	4.1	4.1	4.1
Light transmittance (τ)	0.68	0.63	0.68	0.68	0.63	0.63	0.68	0.63
Sound insulation R_wdB [dB]	39	41	39	39	41	41	39	41
Total solar energy transmittance (g)	0.52	0.49	0.52	0.52	0.49	0.49	0.52	0.49
Ultraviolet transmittance (τuv)	0.05	0.05	0.05	0.05	0.05	0.05	0.05	0.05
Burglar resistance window	RC2	RC2	RC2	RC1	RC2	RC2	NPD	NPD
Frame factor	0.1	0.1	0.1	0.1	0.1	0.1	0.1	0.1
Air permeability	4	4	4	4	4	4	4	4
Reaction to fire	C-s2, d2	C-s2, d2	C-s2, d2	C-s2, d2	C-s2, d2	C-s2, d2	C-s2, d2	C-s2, d2
Bonding of cover glass (glass of top unit) [class]	ΔX≥0.75	ΔX≥0.75	ΔX≥0.75	ΔX≥0.75	ΔX≥0.75	ΔX≥0.75	ΔX≥0.75	ΔX≥0.75
External fire performance - European								
External fire performance - British	NPD	NPD	NPD	NPD	NPD	NPD	NPD	NPD
Impact resistance	3	3	3	3	3	3	3	3
Impact resistance large soft body	N/A	N/A	N/A	N/A	N/A	N/A	N/A	N/A
Impact resistance small hard body	N/A	N/A	N/A	N/A	N/A	N/A	N/A	N/A
Rain noise	44 dB	44 dB	44 dB	44 dB	44 dB	44 dB	44 dB	44 dB
Resistance to downward loads	N/A	N/A	N/A	N/A	N/A	N/A	N/A	N/A
Resistance to fire	NPD	NPD	NPD	NPD	NPD	NPD	NPD	NPD
Resistance to snow load	*	*	*	*	*	*	*	*
Resistance to upward load	N/A	N/A	N/A	N/A	N/A	N/A	N/A	N/A
Resistance to wind load	C3	C3	C3	C3	C3	C3	C3	C3
Water tightness	9A	9A	9A	9A	9A	9A	9A	9A

NPD: No performance determined
* : See glazing composition

Creation date 18-11-2025 13:56:24

VELUX electric glass rooflight CVU, Glazing 20, double-glazed



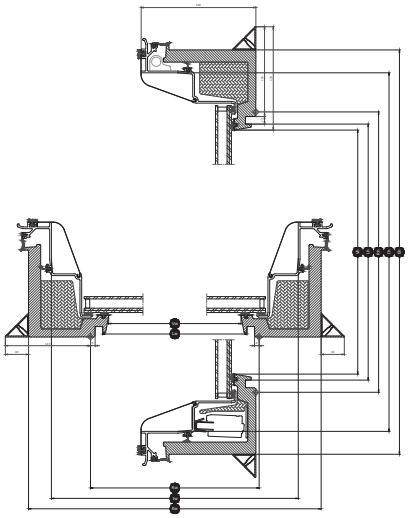

Transform your home by bringing the magic of daylight and fresh air into areas where you never thought possible with the new generation of VELUX glass rooflights. The base unit of the electrically vented glass rooflight has a unique design with a slim frame and invisible sash providing maximum daylight and a beautiful design from inside the home. This vented base unit comes with 2-layer glazing, but is also available with 3-layer glazing, and has excellent energy performance as well as sound reduction capabilities in case of rain, hail or traffic. It delivers fresh air at the touch of a button and has a pre-installed rain sensor that conveniently closes the window automatically in the event of rain, thus providing full peace of mind. It can even be operated via a smart phone, using the VELUX App Control. A both beautiful and convenient solution for your home.

- Unique ThermoTechnology™ material contributes to optimal energy efficiency and indoor comfort
- The wall switch is pre-paired to work with your rooflight right out of the box.
- The motor is hidden from view in the rooflight frame for a sleek appearance and unobstructed view to the sky.

Width		060	080	090	100	120	150
Vw	Visible pane width	538.2	738.2	838.2	938.4	1138.2	1438.2
Lw	Inside groove measure width	559	759	859	959	1159	1459
Rw	Roof opening width	600	800	900	1000	1200	1500
Iw	Inside sash measure width	736	936	1036	1136	1228	1636
Ew	External frame width	815	1015	1115	1215	1415	1715

Height		060	080	090	100	120
Vh	Visible pane height	538.2	738.2	838.2	938.2	1138.2
Lh	Inside groove measure height	559	759	859	959	1159
Rh	Roof opening height	600	800	900	1000	1200
Ih	Inside sash measure height	736	936	1036	1136	1228
Eh	External frame height	815	1015	1115	1215	1415

Creation date 18-11-2025 13:56:24

VELUX fixed glass rooflight CFU, Glazing 20, double-glazed



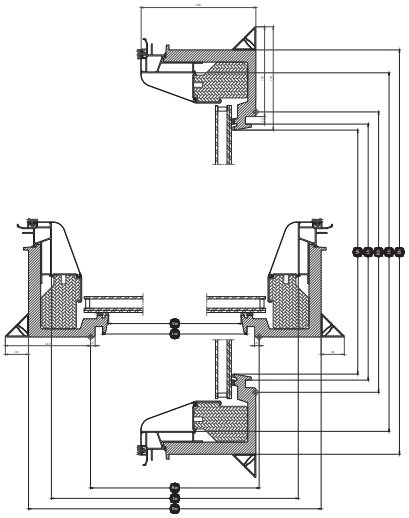

Transform your home by bringing the magic of daylight into areas where you never thought possible with the new generation of VELUX glass rooflights. The base unit of the fixed glass rooflight has a unique design with a slim frame and invisible sash providing maximum daylight and a beautiful design from inside the home. This fixed base unit has 2-layer glazing, but is also available with 3-layer glazing, and has excellent energy performance as well as sound reduction capabilities in case of rain, hail or traffic, thus increasing your indoor comfort.

- Unique ThermoTechnology™ material contributes to optimal energy efficiency and indoor comfort
- The low placement of the insulating glass unit in the construction gives optimal energy performance and an elegant, slim design - especially with blinds and awnings installed.
- The loose installation triangle gives you more flexibility during installation and supports installation of the rooflight in different roofing materials and uneven roof surfaces.

Width		060	080	090	100	120	150
Vw	Visible pane width	538.2	738.2	838.2	938.4	1138.2	1438.2
Lw	Inside groove measure width	559	759	859	959	1159	1459
Rw	Roof opening width	600	800	900	1000	1200	1500
Iw	Inside sash measure width	736	936	1036	1136	1228	1636
Ew	External frame width	815	1015	1115	1215	1415	1715

Height		060	080	090	100	120
Vh	Visible pane height	538.2	738.2	838.2	938.2	1138.2
Lh	Inside groove measure height	559	759	859	959	1159
Rh	Roof opening height	600	800	900	1000	1200
Ih	Inside sash measure height	736	936	1036	1136	1228
Eh	External frame height	815	1015	1115	1215	1415

Creation date 18-11-2025 13:56:24

VELUX fixed glass rooflight CFU, Glazing 25, triple-glazed



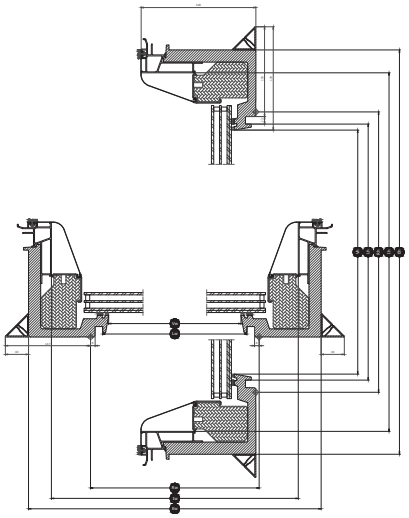

Transform your home by bringing the magic of daylight into areas where you never thought possible with the new generation of VELUX glass rooflights. The base unit of the fixed glass rooflight has a unique design with a slim frame and invisible sash providing maximum daylight and a beautiful design from inside the home. This fixed base unit has 3-layer glazing, but is also available with 2-layer glazing, and has excellent energy performance as well as sound reduction capabilities in case of rain, hail or traffic, thus increasing your indoor comfort.

- Unique ThermoTechnology™ material contributes to optimal energy efficiency and indoor comfort
- The low placement of the insulating glass unit in the construction gives optimal energy performance and an elegant, slim design - especially with blinds and awnings installed.
- The loose installation triangle gives you more flexibility during installation and supports installation of the rooflight in different roofing materials and uneven roof surfaces.

Width		060	080	090	100	120	150
Vw	Visible pane width	538.2	738.2	838.2	938.4	1138.2	1438.2
Lw	Inside groove measure width	559	759	859	959	1159	1459
Rw	Roof opening width	600	800	900	1000	1200	1500
Iw	Inside sash measure width	736	936	1036	1136	1228	1636
Ew	External frame width	815	1015	1115	1215	1415	1715

Height		060	080	090	100	120
Vh	Visible pane height	538.2	738.2	838.2	938.2	1138.2
Lh	Inside groove measure height	559	759	859	959	1159
Rh	Roof opening height	600	800	900	1000	1200
Ih	Inside sash measure height	736	936	1036	1136	1228
Eh	External frame height	815	1015	1115	1215	1415

Creation date 18-11-2025 13:56:24

VELUX solar glass rooflight CVU, Glazing 20, double-glazed



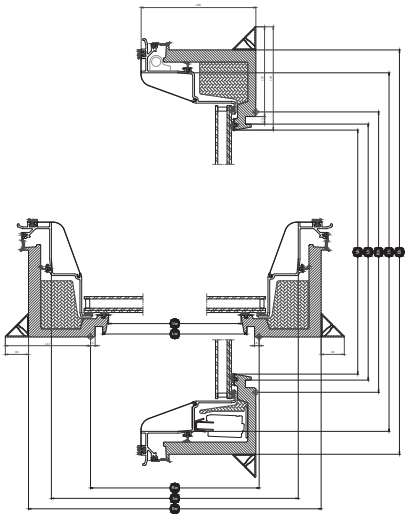

Transform your home by bringing the magic of daylight and fresh air into areas where you never thought possible with the new generation of VELUX glass rooflights. The glass rooflight base unit has a unique design with a slim frame and invisible sash providing maximum daylight and a beautiful design from inside the home. This solar base unit is fully powered by the sun and can be installed in any flat roof home without any need for wiring. The solar base unit comes with 2-layer glazing, but is also available with 3-layer glazing, and has excellent energy performance as well as sound reduction capabilities in case of rain, hail or traffic. It delivers fresh air at the touch of a button and has a pre-installed rain sensor that conveniently closes the window automatically in the event of rain, thus providing full peace of mind. It can even be operated via a smart phone, using the VELUX App Control. A both beautiful and convenient solution for your home.

- Unique ThermoTechnology™ material contributes to optimal energy efficiency and indoor comfort
- The wall switch is pre-paired to work with your rooflight right out of the box.
- The motor is hidden from view in the rooflight frame for a sleek appearance and unobstructed view to the sky.

Width		060	080	090	100	120	150
Vw	Visible pane width	538.2	738.2	838.2	938.4	1138.2	1438.2
Lw	Inside groove measure width	559	759	859	959	1159	1459
Rw	Roof opening width	600	800	900	1000	1200	1500
Iw	Inside sash measure width	736	936	1036	1136	1228	1636
Ew	External frame width	815	1015	1115	1215	1415	1715

Height		060	080	090	100	120
Vh	Visible pane height	538.2	738.2	838.2	938.2	1138.2
Lh	Inside groove measure height	559	759	859	959	1159
Rh	Roof opening height	600	800	900	1000	1200
Ih	Inside sash measure height	736	936	1036	1136	1228
Eh	External frame height	815	1015	1115	1215	1415

Creation date 18-11-2025 13:56:24

VELUX solar glass rooflight CVU, Glazing 25, triple-glazed



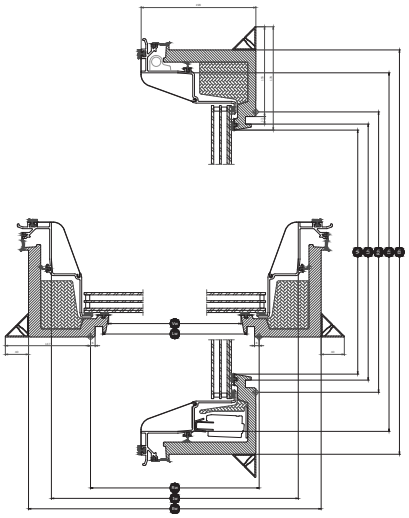

Transform your home by bringing the magic of daylight and fresh air into areas where you never thought possible with the new generation of VELUX glass rooflights. The glass rooflight base unit has a unique design with a slim frame and invisible sash providing maximum daylight and a beautiful design from inside the home. This solar base unit is fully powered by the sun and can be installed in any flat roof home without any need for wiring. The solar base unit comes with 3-layer glazing, but is also available with 2-layer glazing, and has excellent energy performance as well as sound reduction capabilities in case of rain, hail or traffic. It delivers fresh air at the touch of a button and has a pre-installed rain sensor that conveniently closes the window automatically in the event of rain, thus providing full peace of mind. It can even be operated via a smart phone, using the VELUX App Control. A both beautiful and convenient solution for your home.

- Unique ThermoTechnology™ material contributes to optimal energy efficiency and indoor comfort
- The wall switch is pre-paired to work with your rooflight right out of the box.
- The motor is hidden from view in the rooflight frame for a sleek appearance and unobstructed view to the sky.

Width		060	080	090	100	120	150
Vw	Visible pane width	538.2	738.2	838.2	938.4	1138.2	1438.2
Lw	Inside groove measure width	559	759	859	959	1159	1459
Rw	Roof opening width	600	800	900	1000	1200	1500
Iw	Inside sash measure width	736	936	1036	1136	1228	1636
Ew	External frame width	815	1015	1115	1215	1415	1715

Height		060	080	090	100	120
Vh	Visible pane height	538.2	738.2	838.2	938.2	1138.2
Lh	Inside groove measure height	559	759	859	959	1159
Rh	Roof opening height	600	800	900	1000	1200
Ih	Inside sash measure height	736	936	1036	1136	1228
Eh	External frame height	815	1015	1115	1215	1415

Creation date 18-11-2025 13:56:24

VELUX fixed glass rooflight CFU, Glazing 20A, double-glazed



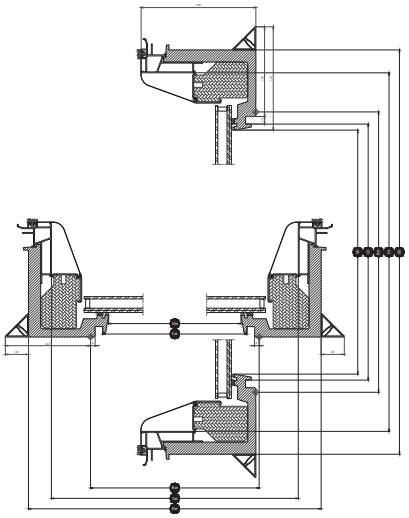

Transform your home by bringing the magic of daylight into areas where you never thought possible with the new generation of VELUX glass rooflights. The base unit of the fixed glass rooflight has a unique design with a slim frame and invisible sash providing maximum daylight and a beautiful design from inside the home. This fixed base unit has 2-layer glazing, but is also available with 3-layer glazing, and has excellent energy performance as well as sound reduction capabilities in case of rain, hail or traffic, thus increasing your indoor comfort.

- Unique ThermoTechnology™ material contributes to optimal energy efficiency and indoor comfort
- The low placement of the insulating glass unit in the construction gives optimal energy performance and an elegant, slim design - especially with blinds and awnings installed.
- The loose installation triangle gives you more flexibility during installation and supports installation of the rooflight in different roofing materials and uneven roof surfaces.

Width		150	200
Vw	Visible pane width	1438.2	1938.2
Lw	Inside groove measure width	1459	1959
Rw	Roof opening width	1500	2000
Iw	Inside sash measure width	1636	2036
Ew	External frame width	1715	2215

Height		060	100	120	150
Vh	Visible pane height	538.2	938.2	1138.2	1438.2
Lh	Inside groove measure height	559	959	1159	1459
Rh	Roof opening height	600	1000	1200	1500
Ih	Inside sash measure height	736	1136	1228	1636
Eh	External frame height	815	1215	1415	1715

Creation date 18-11-2025 13:56:24

VELUX fixed glass rooflight CFU, Glazing 25A, triple-glazed



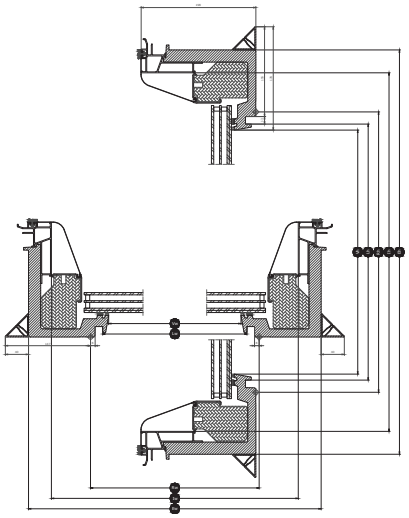

Transform your home by bringing the magic of daylight into areas where you never thought possible with the new generation of VELUX glass rooflights. The base unit of the fixed glass rooflight has a unique design with a slim frame and invisible sash providing maximum daylight and a beautiful design from inside the home. This fixed base unit has 3-layer glazing, but is also available with 2-layer glazing, and has excellent energy performance as well as sound reduction capabilities in case of rain, hail or traffic, thus increasing your indoor comfort.

- Unique ThermoTechnology™ material contributes to optimal energy efficiency and indoor comfort
- The low placement of the insulating glass unit in the construction gives optimal energy performance and an elegant, slim design - especially with blinds and awnings installed.
- The loose installation triangle gives you more flexibility during installation and supports installation of the rooflight in different roofing materials and uneven roof surfaces.

Width		150	200
Vw	Visible pane width	1438.2	1938.2
Lw	Inside groove measure width	1459	1959
Rw	Roof opening width	1500	2000
Iw	Inside sash measure width	1636	2036
Ew	External frame width	1715	2215

Height		060	100	120	150
Vh	Visible pane height	538.2	938.2	1138.2	1438.2
Lh	Inside groove measure height	559	959	1159	1459
Rh	Roof opening height	600	1000	1200	1500
Ih	Inside sash measure height	736	1136	1228	1636
Eh	External frame height	815	1215	1415	1715

Creation date 18-11-2025 13:56:24

VELUX solar glass rooflight CVU, Glazing 20A, double-glazed



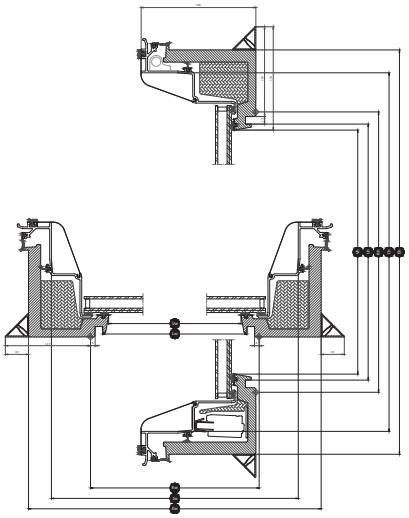

Transform your home by bringing the magic of daylight and fresh air into areas where you never thought possible with the new generation of VELUX glass rooflights. The glass rooflight base unit has a unique design with a slim frame and invisible sash providing maximum daylight and a beautiful design from inside the home. This solar base unit is fully powered by the sun and can be installed in any flat roof home without any need for wiring. The solar base unit comes with 2-layer glazing, but is also available with 3-layer glazing, and has excellent energy performance as well as sound reduction capabilities in case of rain, hail or traffic. It delivers fresh air at the touch of a button and has a pre-installed rain sensor that conveniently closes the window automatically in the event of rain, thus providing full peace of mind. It can even be operated via a smart phone, using the VELUX App Control. A both beautiful and convenient solution for your home.

- Unique ThermoTechnology™ material contributes to optimal energy efficiency and indoor comfort
- The wall switch is pre-paired to work with your rooflight right out of the box.
- The motor is hidden from view in the rooflight frame for a sleek appearance and unobstructed view to the sky.

Width		150	200
Vw	Visible pane width	1438.2	1938.2
Lw	Inside groove measure width	1459	1959
Rw	Roof opening width	1500	2000
Iw	Inside sash measure width	1636	2036
Ew	External frame width	1715	2215

Height		060	100	120	150
Vh	Visible pane height	538.2	938.2	1138.2	1438.2
Lh	Inside groove measure height	559	959	1159	1459
Rh	Roof opening height	600	1000	1200	1500
Ih	Inside sash measure height	736	1136	1228	1636
Eh	External frame height	815	1215	1415	1715

Creation date 18-11-2025 13:56:24

VELUX solar glass rooflight CVU, Glazing 25A, triple-glazed



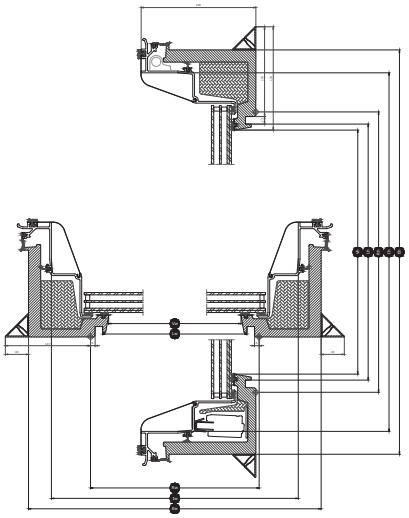

Transform your home by bringing the magic of daylight and fresh air into areas where you never thought possible with the new generation of VELUX glass rooflights. The glass rooflight base unit has a unique design with a slim frame and invisible sash providing maximum daylight and a beautiful design from inside the home. This solar base unit is fully powered by the sun and can be installed in any flat roof home without any need for wiring. The solar base unit comes with 2-layer glazing, but is also available with 3-layer glazing, and has excellent energy performance as well as sound reduction capabilities in case of rain, hail or traffic. It delivers fresh air at the touch of a button and has a pre-installed rain sensor that conveniently closes the window automatically in the event of rain, thus providing full peace of mind. It can even be operated via a smart phone, using the VELUX App Control. A both beautiful and convenient solution for your home.

- Unique ThermoTechnology™ material contributes to optimal energy efficiency and indoor comfort
- The wall switch is pre-paired to work with your rooflight right out of the box.
- The motor is hidden from view in the rooflight frame for a sleek appearance and unobstructed view to the sky.

Width		150	200
Vw	Visible pane width	1438.2	1938.2
Lw	Inside groove measure width	1459	1959
Rw	Roof opening width	1500	2000
Iw	Inside sash measure width	1636	2036
Ew	External frame width	1715	2215

Height		060	100	120	150
Vh	Visible pane height	538.2	938.2	1138.2	1438.2
Lh	Inside groove measure height	559	959	1159	1459
Rh	Roof opening height	600	1000	1200	1500
Ih	Inside sash measure height	736	1136	1228	1636
Eh	External frame height	815	1215	1415	1715

Creation date 18-11-2025 13:56:24

Insulating glass unit structure

	Glazing 20, double-glazed	Glazing 20A, double-glazed	Glazing 25, triple-glazed	Glazing 25A, triple-glazed
Variant composition	7.5mm laminated float glass - 16mm Argon - 4mm toughened glass with enamel	9.5 mm laminated float glass - 15 mm Argon - 8 mm toughened glass with enamel	7.5 mm laminated float glass - 10 mm Argon - 3 mm heat strengthened glass - 10 mm Argon - 4 mm toughened glass with enamel	9.5mm laminated float glass - 10mm Argon - 4mm heat strengthened glass - 10mm Argon - 8mm toughened glass with enamel

Cleaning and maintenance



Cleaning of the top unit is only possible from the outside. When cleaning the top unit on vented glass rooflights, switch off the mains supply, ie do not open the rooflight!
To clean the inner surface of the top unit and the outer glass surface of the base unit, remove cover caps and screws to remove the top unit and fasten them again after cleaning.
In regions with heavy snowfall, snow masses on the flat-roof window must be removed on a regular basis.

Guarantee period



The full terms and conditions of the VELUX Product Guarantee are available on our website www.velux.co.uk or www.velux.ie

Blinds and awnings

Complete your VELUX glass rooflight with a blind for complete comfort. Choose between an anti-heat blind to maintain a cool room on hot days or a blackout blind to block outside light for total darkness. The blinds are discreetly placed and do not compromise daylight and design when not in use. You also have the option of adding an insect screen that lets you enjoy fresh air without any insects.
Use VELUX App Control or VELUX ACTIVE with NETATMO for smartphone control of your vented glass rooflight and blinds.

Creation date 18-11-2025 13:56:24

Further information

We reserve the right to make technical changes.

For more information on our products, please visit https://www.velux.co.uk or https://www.velux.ie.

Creation date 18-11-2025 13:56:24